2009 KX™250F PARTS DIAGRAM

Clutch

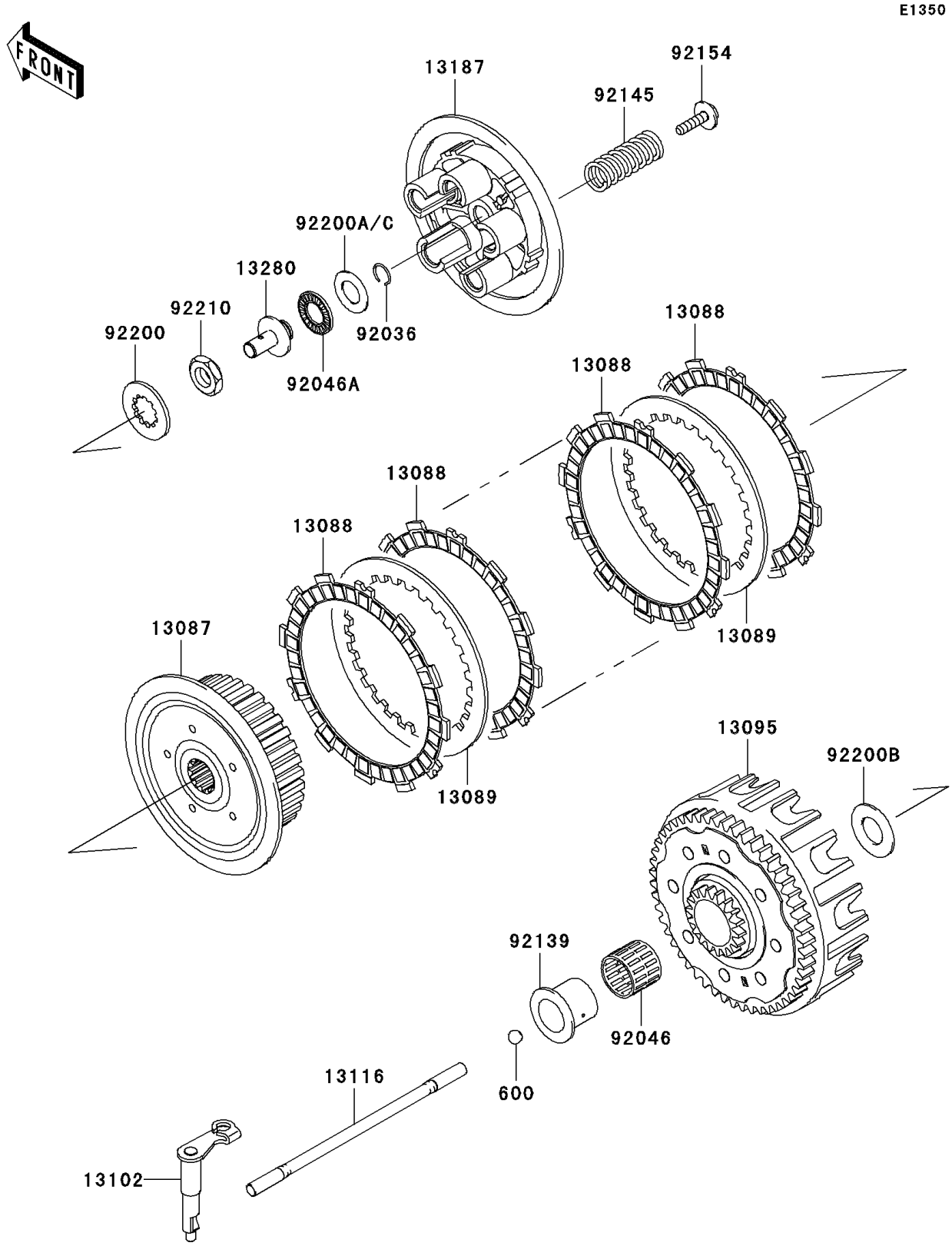

© 2024 Kawasaki Motors Corp., U.S.A.

2009 KX™250F PARTS LIST

Clutch

ITEM NAME	PART NUMBER	QUANTITY
BALL-STEEL,5/16" (Ref # 600)	600A1000	1
HUB-CLUTCH (Ref # 13087)	13087-0017	1
PLATE-FRICTION (Ref # 13088)	13088-0018	8
PLATE-CLUTCH,T=1.6 (Ref # 13089)	13089-0005	7
HOUSING-COMP-CLUTCH (Ref # 13095)	13095-0107	1
RELEASE-COMP-CLUTCH (Ref # 13102)	13102-0034	1
ROD-PUSH (Ref # 13116)	13116-0037	1
PLATE-CLUTCH OPERATING (Ref # 13187)	13187-1089	1
HOLDER (Ref # 13280)	13280-0163	1
RING-SNAP (Ref # 92036)	92036-007	1
BEARING-NEEDLE,WRS273124A (Ref # 92046)	92046-0016	1
BEARING-NEEDLE,FNTA-1326 (Ref # 92046A)	92046-1190	1
BUSHING (Ref # 92139)	92139-0014	1
SPRING,K=10.7N/MM (Ref # 92145)	92145-0351	5
BOLT,6X25 (Ref # 92154)	92154-0180	5
WASHER,21.6X38X2.5 (Ref # 92200)	92200-0027	1
WASHER,13.4X25X1.0 (Ref # 92200A)	92200-0045	AR
WASHER,22.3X43X2 (Ref # 92200B)	92200-0098	1
WASHER,13.4X25.0X1.5 (Ref # 92200C)	92200-1548	1
NUT,16MM (Ref # 92210)	92210-1207	1

© 2024 Kawasaki Motors Corp., U.S.A.