2003 ZR-7S PARTS DIAGRAM

Fenders

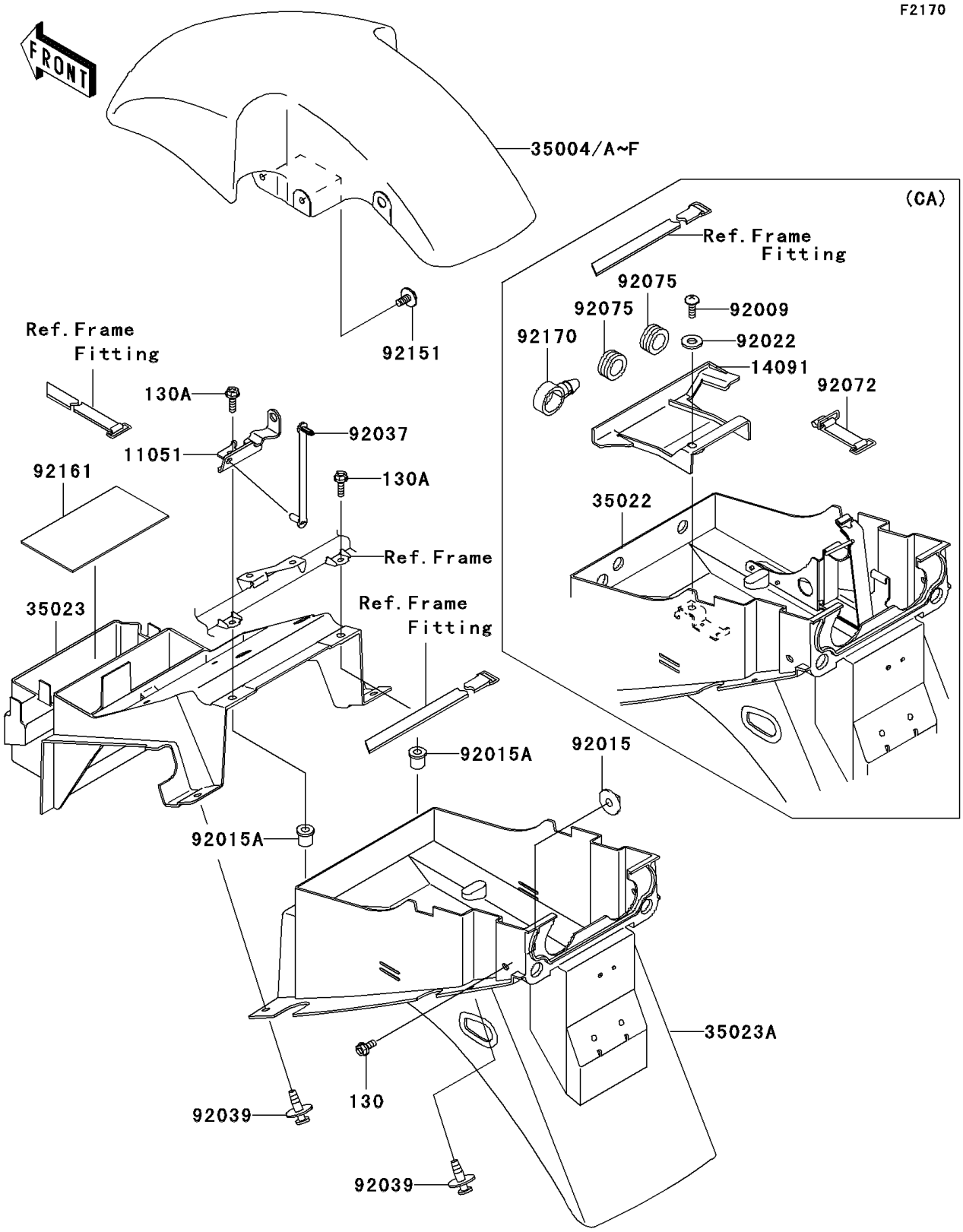

© 2025 Kawasaki Motors Corp., U.S.A.

2003 ZR-7S PARTS LIST

Fenders

ITEM NAME	PART NUMBER	QUANTITY
BOLT-FLANGED,6X14,BLACK (Ref # 130)	130J0614	2
BOLT-FLANGED (Ref # 130A)	130J0620	2
BRACKET (Ref # 11051)	11051-1516	1
FENDER-FRONT,P.C.YELLOW (Ref # 35004D)	35004-1436-1B	1
FENDER-REAR,FR (Ref # 35023)	35023-1535	1
NUT,6MM (Ref # 92015)	92015-1321	2
NUT (Ref # 92015A)	92015-1700	2
CLAMP,SPEED,L=58 (Ref # 92037)	92037-1163	1
RIVET (Ref # 92039)	92039-1227	4
BOLT,6X16 (Ref # 92151)	92151-1530	4
DAMPER,BATTERY (Ref # 92161)	92161-1085	1
COVER,CANISTER (Ref # 14091)	14091-1164	1
FENDER-FRONT,C.L.BLUE (Ref # 35004A)	35004-1436-E1	1
FENDER-FRONT,M.R.RED (Ref # 35004E)	35004-1436-468	1
FENDER-COMP-REAR,RR (Ref # 35022)	35022-1356	1
FENDER-REAR,RR (Ref # 35023A)	35023-1562	1
SCREW,6X14 (Ref # 92009)	92009-1662	1
WASHER,6.5X16X1 (Ref # 92022)	92022-1143	1
BAND (Ref # 92072)	92072-1085	2
DAMPER (Ref # 92075)	92075-1912	2
CLAMP (Ref # 92170)	92170-1067	1

© 2025 Kawasaki Motors Corp., U.S.A.