2003 ZR-7S PARTS DIAGRAM

Engine Cover(s)

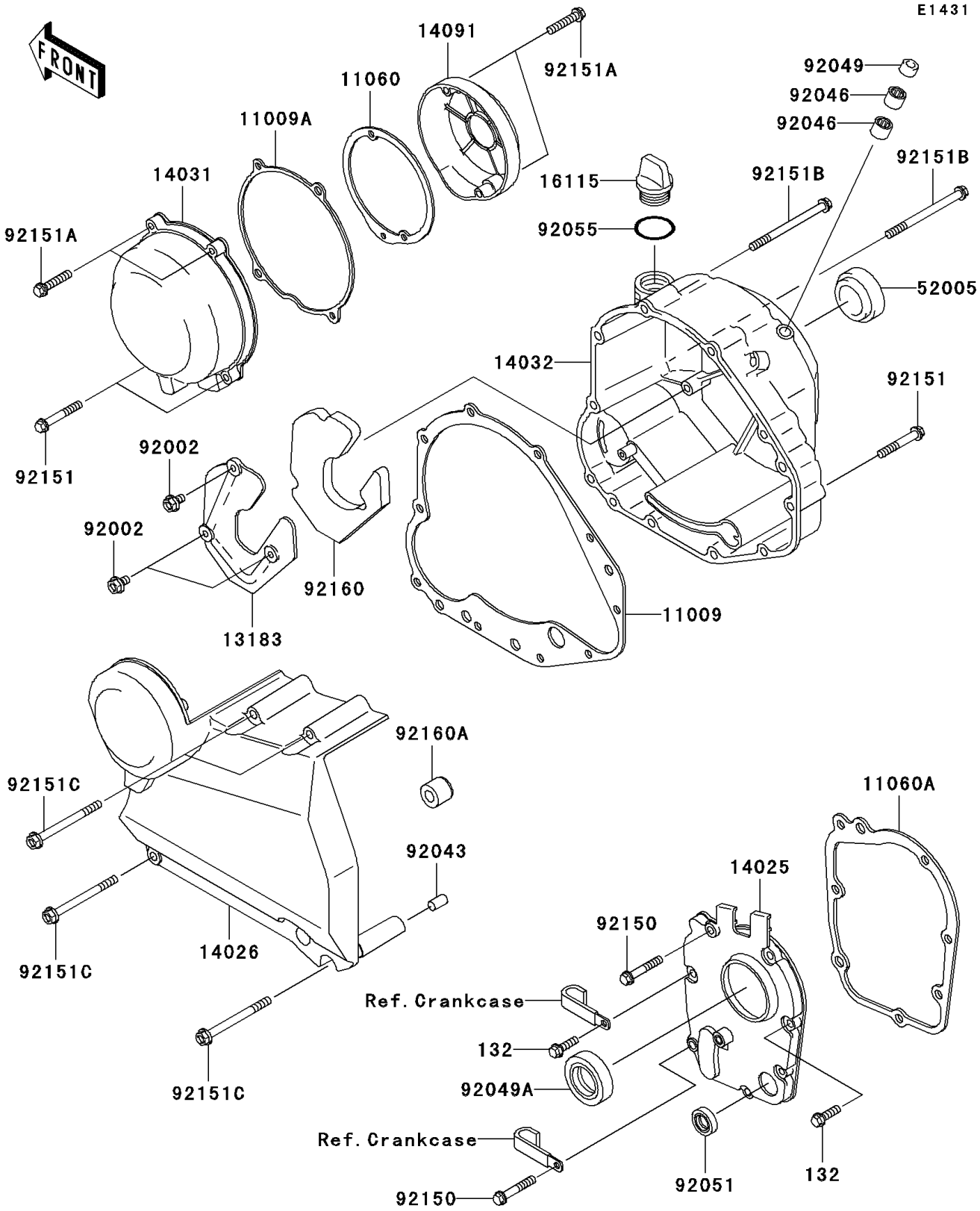

© 2025 Kawasaki Motors Corp., U.S.A.

2003 ZR-7S PARTS LIST

Engine Cover(s)

ITEM NAME	PART NUMBER	QUANTITY
BOLT-FLANGED-SMALL (Ref # 132)	132Y0620	5
GASKET,CLUTCH COVER (Ref # 11009)	11009-1984	1
GASKET,GENERATOR COVER (Ref # 11009A)	11009-1987	1
GASKET,PULSING COIL CAP (Ref # 11060)	11060-1053	1
GASKET,TRANSMISSION COVER (Ref # 11060A)	11060-1899	1
PLATE,SOUND ARRESTER (Ref # 13183)	13183-1620	1
COVER,TRANSMISSION (Ref # 14025)	14025-1605	1
COVER-CHAIN (Ref # 14026)	14026-1264	1
COVER-GENERATOR (Ref # 14031)	14031-1367	1
COVER-CLUTCH (Ref # 14032)	14032-1496	1
COVER,PULSING (Ref # 14091)	14091-1102	1
CAP-OIL FILLER (Ref # 16115)	16115-1009	1
GAUGE,OIL LEVEL (Ref # 52005)	52005-1017	1
BOLT,6X10 (Ref # 92002)	92002-1449	3
PIN,6.2X8X14 (Ref # 92043)	92043-1263	1
BEARING-NEEDLE,HK1210 (Ref # 92046)	92046-1010	2
SEAL-OIL,TB12205.5 (Ref # 92049)	92049-1271	1
SEAL-OIL,HTC 32 52 10 (Ref # 92049A)	92049-1506	1
SEAL-OIL,TB13225.5 (Ref # 92051)	92051-005	1
RING-O,31.7X2.4 (Ref # 92055)	92055-049	1
BOLT,6X35 (Ref # 92150)	92150-1137	2
BOLT,6X40 (Ref # 92151)	92151-1131	10
BOLT,6X30 (Ref # 92151A)	92151-1134	4
BOLT,6X80 (Ref # 92151B)	92151-1200	2
BOLT,6X70 (Ref # 92151C)	92151-1482	4
DAMPER,SOUND ARRESTER (Ref # 92160)	92160-1246	1
DAMPER (Ref # 92160A)	92160-1993	8

© 2025 Kawasaki Motors Corp., U.S.A.