1991 Zephyr PARTS DIAGRAM

Ignition Coil

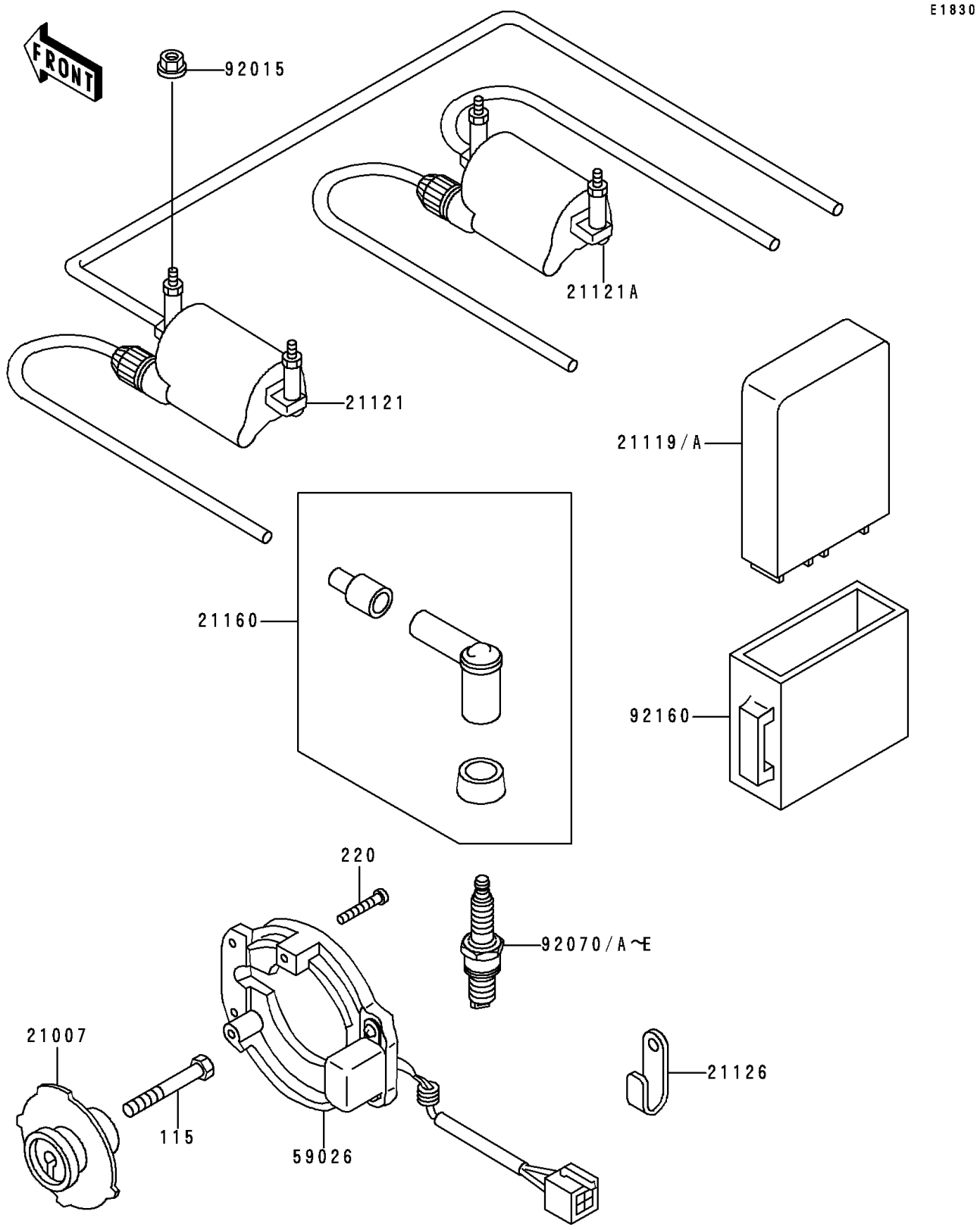

© 2024 Kawasaki Motors Corp., U.S.A.

1991 Zephyr PARTS LIST

Ignition Coil

ITEM NAME	PART NUMBER	QUANTITY
BOLT-SMALL-UPSET (Ref # 115)	115G0845	1
SCREW-PAN-CROS,5X25 (Ref # 220)	220B0525	3
ROTOR,PULSING (Ref # 21007)	21007-1193	1
IGNITER (Ref # 21119)	21119-1277	1
COIL-IGNITION,#1&#4 (Ref # 21121)	21121-1177	1
COIL-IGNITION,#2&#3 (Ref # 21121A)	21121-1178	1
CLAMP,WIRING HARNESS (Ref # 21126)	21126-008	3
CAP-ASSY-PLUG (Ref # 21160)	21160-1085	4
COIL-PULSING (Ref # 59026)	59026-1108	1
NUT,FLANGED,6MM (Ref # 92015)	92015-1193	4
PLUG-SPARK,D8EA(NGK) (Ref # 92070)	92070-1011	4
PLUG-SPARK,X24ES-U(ND) (Ref # 92070A)		4
PLUG-SPARK,D9EA(NGK) (Ref # 92070B)	92070-1034	4
PLUG-SPARK,X27ES-U(ND) (Ref # 92070C)		4
PLUG-SPARK,X27ESR-U(ND) (Ref # 92070D)		4
PLUG-SPARK,DR9EA(NGK) (Ref # 92070E)	92070-1189	4
DAMPER,IGNITER (Ref # 92160)	92160-1181	1

© 2024 Kawasaki Motors Corp., U.S.A.