2004 ZRX1200R PARTS DIAGRAM

Fuel Tank

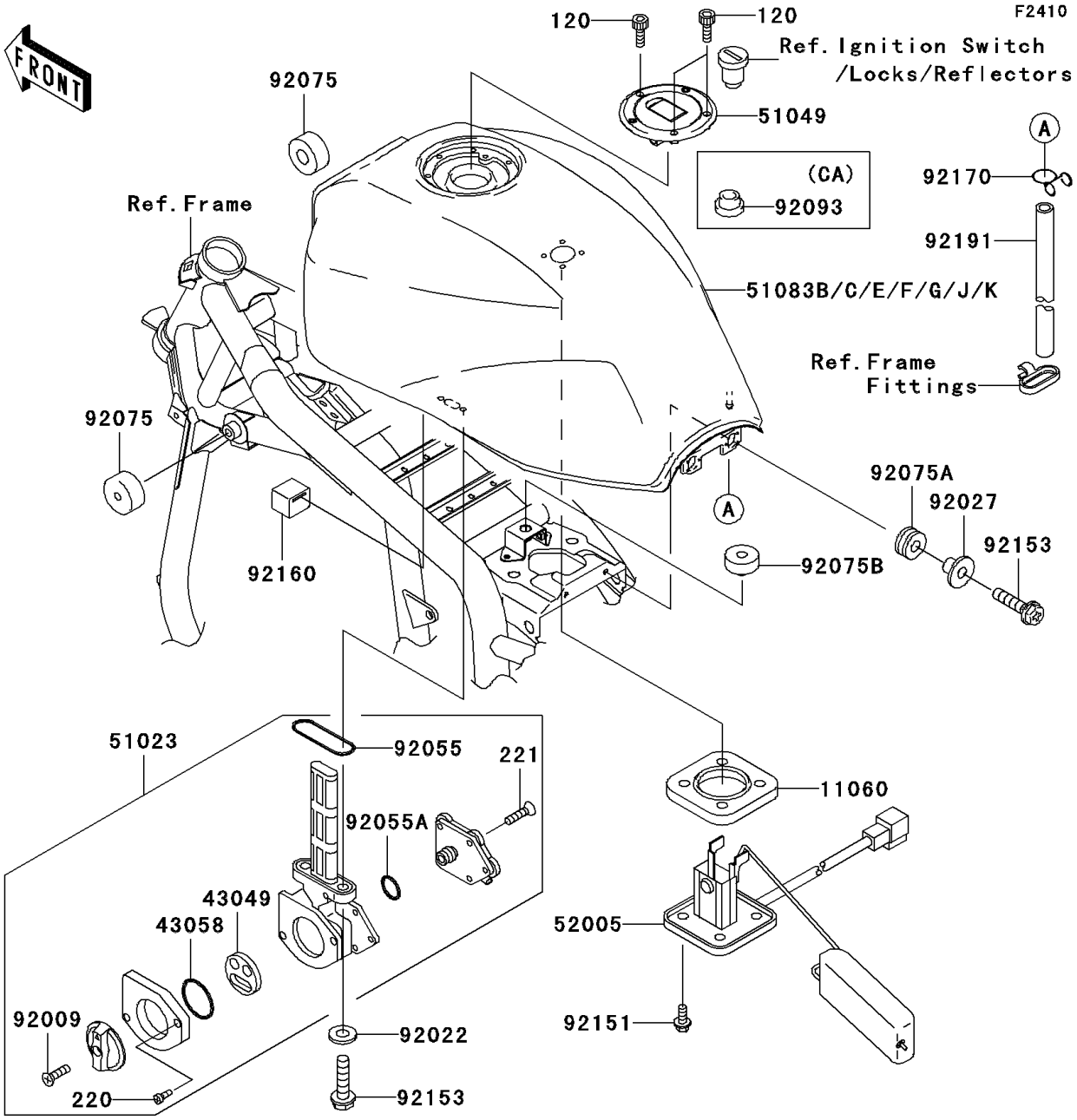

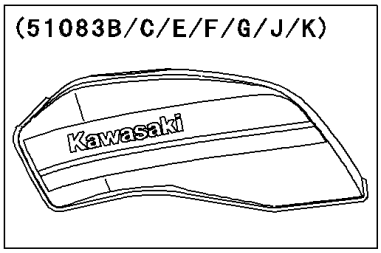

WD

('04)	(51083B/C)	Silver
	(51083E)	Green
	(51083F/G)	Red
('05)	(51083J/K)	Green

© 2024 Kawasaki Motors Corp., U.S.A.

2004 ZRX1200R PARTS LIST

Fuel Tank

ITEM NAME	PART NUMBER	QUANTITY
GASKET,FUEL GAUGE (Ref # 11060)	11060-1952	1
PACKING,TAP VALVE (Ref # 43049)	43049-1075	1
RING,TAP LEVER (Ref # 43058)	43058-1083	1
TAP-ASSY,FUEL (Ref # 51023)	51023-1260	1
CAP-TANK,FUEL (Ref # 51049)	51049-0010	1
GAUGE,FUEL (Ref # 52005)	52005-1145	1
SCREW,4X12 (Ref # 92009)	92009-1742	1
WASHER,6.2X11X1.5 (Ref # 92022)	92022-183	2
COLLAR,L=13.1 (Ref # 92027)	92027-251	2
RING-O,FUEL TAP PACKING (Ref # 92055)	92055-1112	1
RING-O (Ref # 92055A)	92055-1649	1
DAMPER,FUEL TANK (Ref # 92075)	92075-101	2
DAMPER (Ref # 92075A)	92075-1690	2
DAMPER (Ref # 92075B)	92075-1737	1
BOLT,5X12 (Ref # 92151)	92151-1599	4
BOLT-SOCKET (Ref # 120)	120S0516	3
SCREW-PAN-CROS (Ref # 220)	220B0308	2
SCREW-CSK-CROS,4X14 (Ref # 221)	221B0414	5
BOLT,FLANGED,6X25 (Ref # 92153)	92153-0514	4
DAMPER (Ref # 92160)	92160-1626	1
CLAMP,TUBE (Ref # 92170)	92170-1834	1
TUBE,7X12X600 (Ref # 92191)	92191-1138	1
TANK-COMP-FUEL,G.SILVER (Ref # 51083B)	51083-5167-474	1
TANK-COMP-FUEL,G.SILVER (Ref # 51083C)	51083-5168-474	1
TANK-COMP-FUEL,C.L.GREEN (Ref # 51083E)	51083-5171-8N	1
TANK-COMP-FUEL,P.RED (Ref # 51083F)	51083-5172-234	1
TANK-COMP-FUEL,P.RED (Ref # 51083G)	51083-5240-234	1
SEAL,FUEL TANK CAP (Ref # 92093)	92093-1030	1

© 2024 Kawasaki Motors Corp., U.S.A.