2009 Mule 4000 PARTS DIAGRAM

Rear Fender(s)

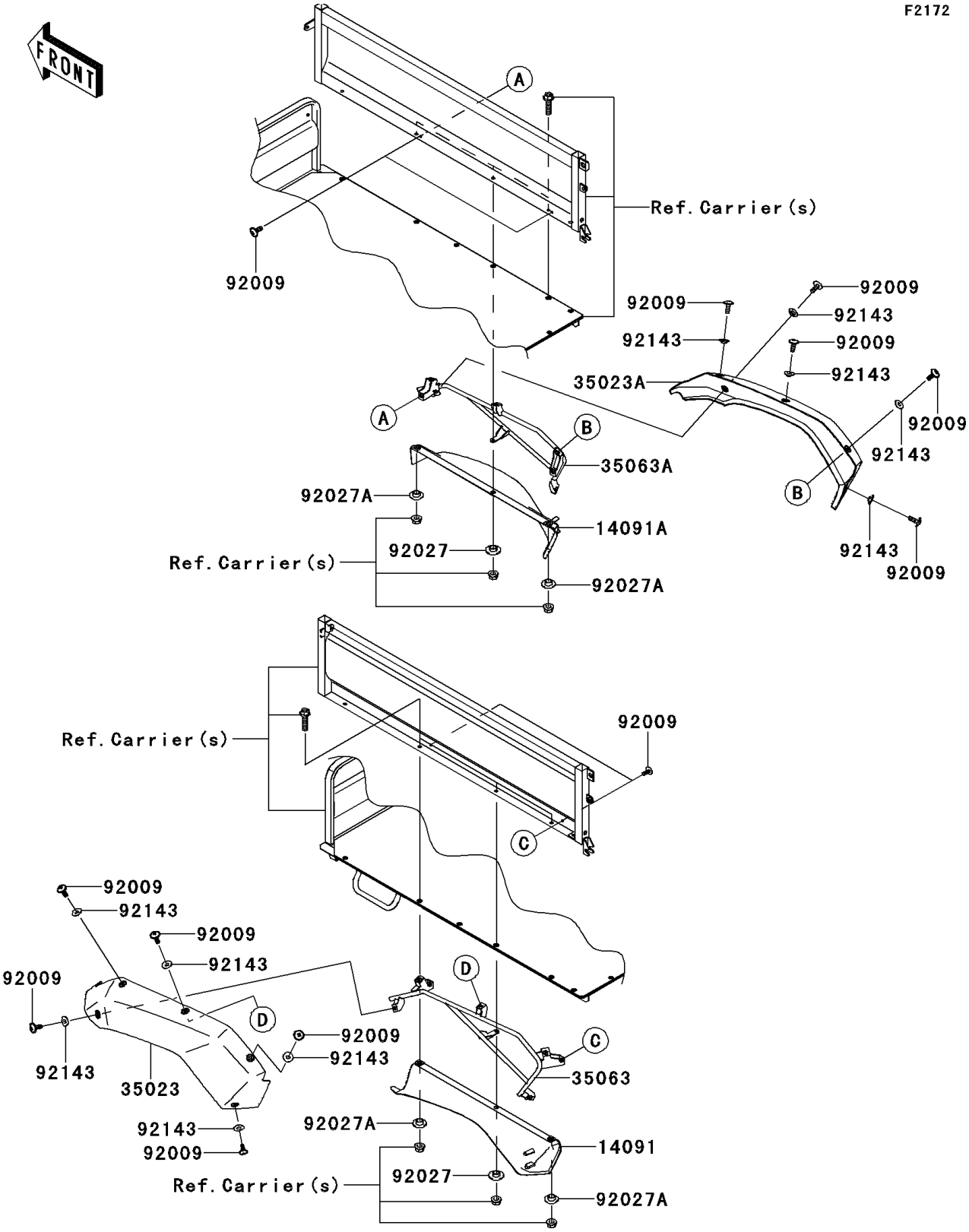

© 2024 Kawasaki Motors Corp., U.S.A.

2009 Mule 4000 PARTS LIST

Rear Fender(s)

ITEM NAME	PART NUMBER	QUANTITY
COVER,FENDER,INSIDE,RR,LH (Ref # 14091)	14091-1634	1
COVER,FENDER,INSIDE,RR,RH (Ref # 14091A)	14091-1635	1
FENDER-REAR,LH,F.BLACK (Ref # 35023)	35023-0121-6Z	1
FENDER-REAR,RH,F.BLACK (Ref # 35023A)	35023-0122-6Z	1
STAY,RR,LH (Ref # 35063)	35063-0449	1
STAY,RR,RH (Ref # 35063A)	35063-0450	1
SCREW,6X16 (Ref # 92009)	92009-1621	14
COLLAR (Ref # 92027)	92027-1354	2
COLLAR (Ref # 92027A)	92027-1908	4
COLLAR (Ref # 92143)	92143-1087	10

© 2024 Kawasaki Motors Corp., U.S.A.