2011 Mule 4010 Trans4x4

PARTS DIAGRAM

Ignition Switch

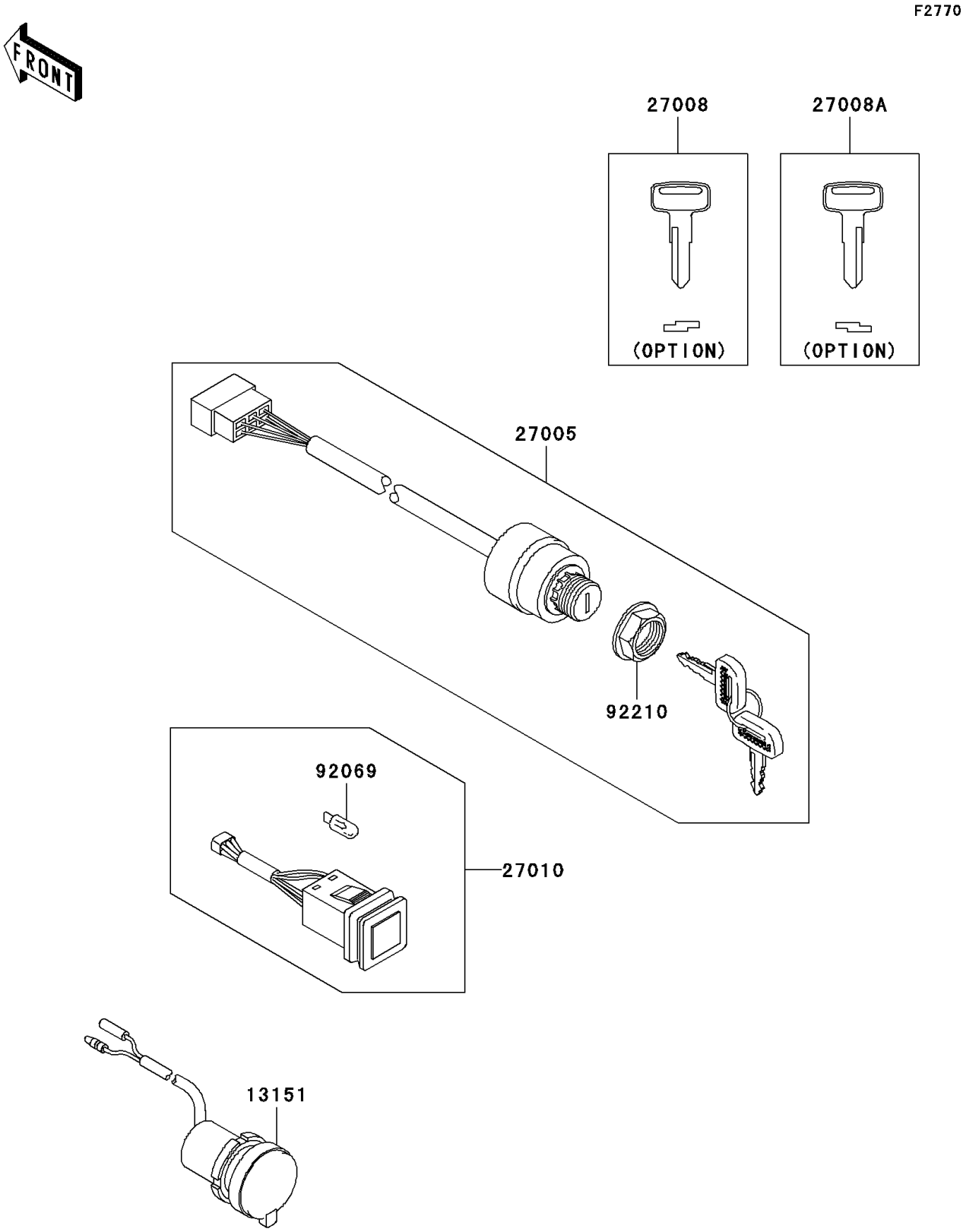

© 2026 Kawasaki Motors Corp., U.S.A.

2011 Mule 4010 Trans4x4

PARTS LIST

Ignition Switch

ITEM NAME	PART NUMBER	QUANTITY
SWITCH-COMP,D.C.TERMINAL (Ref # 13151)	13151-0003	1
SWITCH-ASSY-IGNITION (Ref # 27005)	27005-0011	1
KEY-LOCK,BLANK (Ref # 27008)	27008-1153	1
KEY-LOCK,BLANK (Ref # 27008A)	27008-1157	1
SWITCH,HEAD LAMP (Ref # 27010)	27010-0105	1
BULB,12V 1.7W (Ref # 92069)	92069-0036	1
NUT,IGNITION SWITCH (Ref # 92210)	92210-1264	1

© 2026 Kawasaki Motors Corp., U.S.A.