2011 MULE™ 4010 TRANS4x4® PARTS DIAGRAM

Seat(RBF/RBFA)

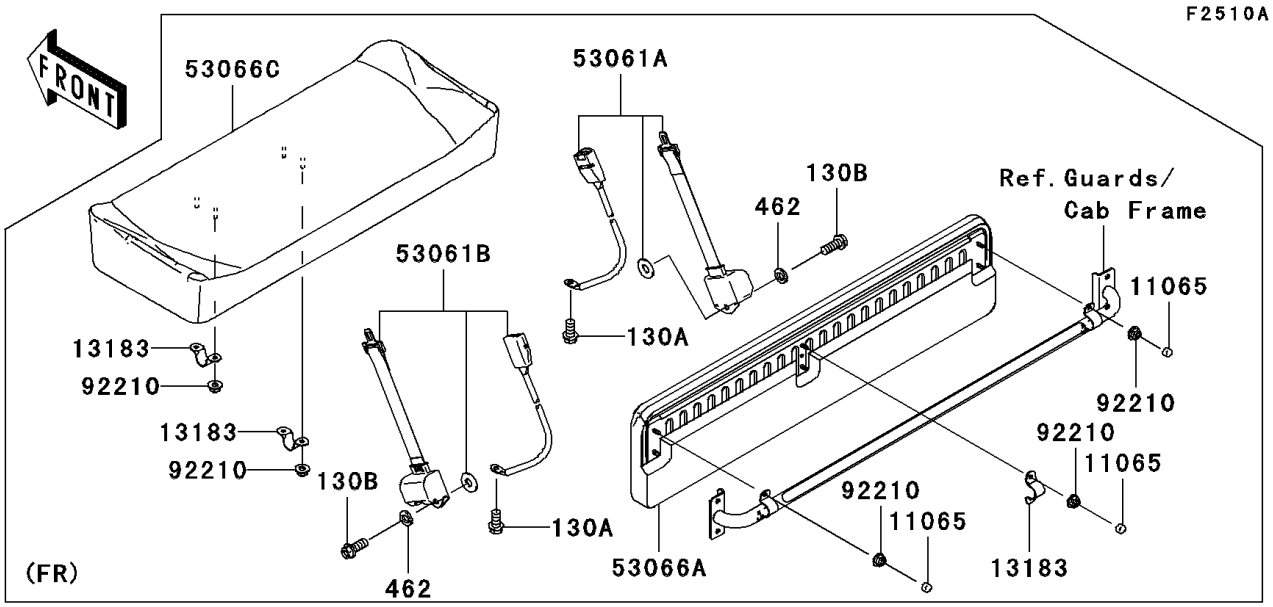

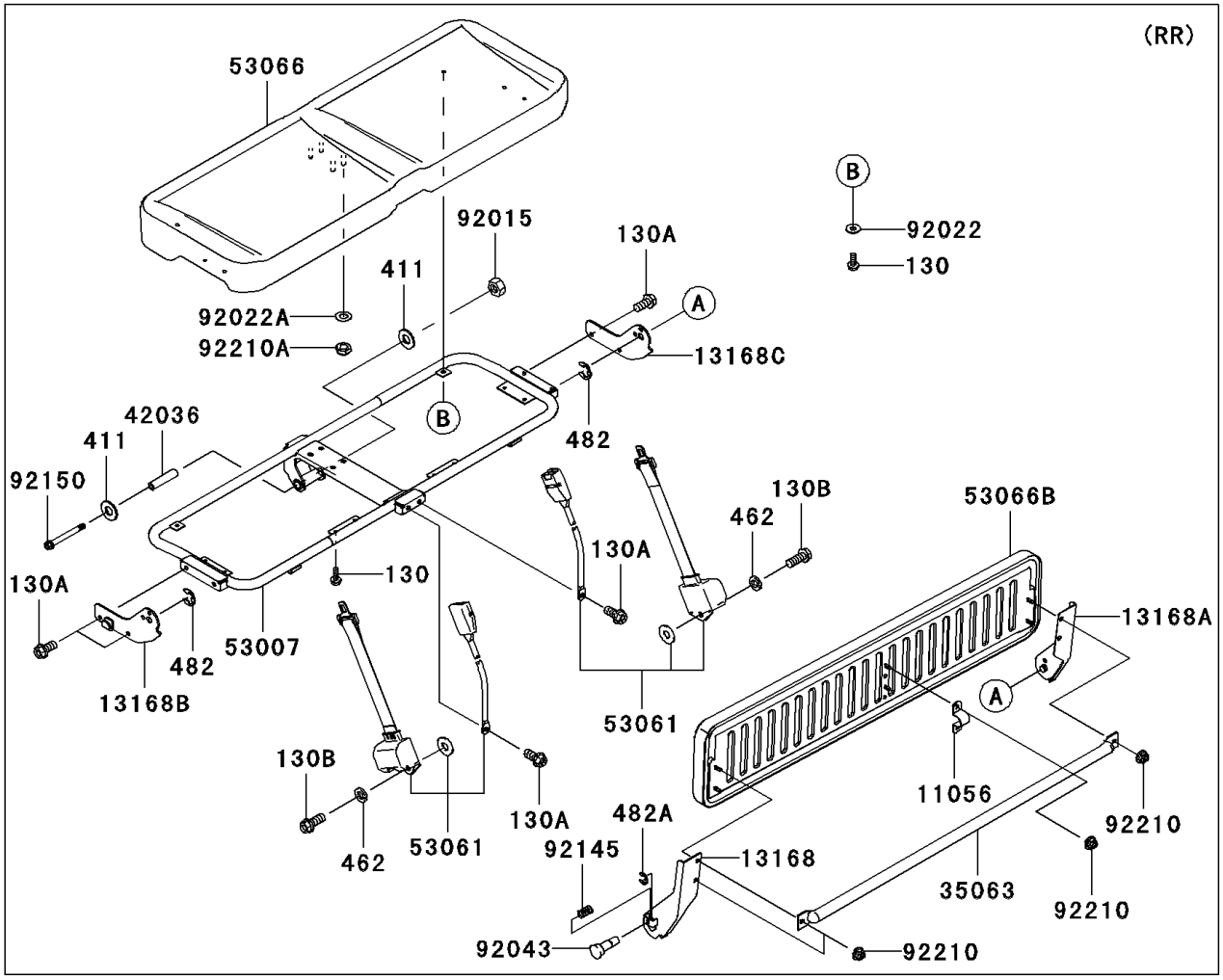

© 2026 Kawasaki Motors Corp., U.S.A.

2011 MULE™ 4010 TRANS4x4® PARTS LIST

Seat(RBF/RBFA)

ITEM NAME	PART NUMBER	QUANTITY
BRACKET,SEAT BACK (Ref # 11056)	11056-0034	1
CAP (Ref # 11065)	11065-7504	6
LEVER,SEAT,TOP,LH (Ref # 13168)	13168-7502	1
LEVER,SEAT,TOP,RH (Ref # 13168A)	13168-7503	1
LEVER,SEAT,LWR,LH (Ref # 13168B)	13168-7504	1
LEVER,SEAT,LWR,RH (Ref # 13168C)	13168-7505	1
PLATE,SEAT (Ref # 13183)	13183-1400	3
STAY,REAR BACK (Ref # 35063)	35063-7510	1
SLEEVE,12.1X20X85 (Ref # 42036)	42036-7501	1
FRAME-SEAT (Ref # 53007)	53007-0120	1
BELT-SEAT,RR (Ref # 53061)	53061-7506	2
BELT-SEAT,FR,RH (Ref # 53061A)	53061-7507	1
BELT-SEAT,FR,LH (Ref # 53061B)	53061-7508	1
SEAT-ASSY,RR,LWR,BLACK (Ref # 53066)	53066-0237-MA	1
SEAT-ASSY,FR,BACK,BLACK (Ref # 53066A)	53066-0258-MA	1
SEAT-ASSY,RR,BACK,BLACK (Ref # 53066B)	53066-0259-MA	1
SEAT-ASSY,FR,LWR,BLACK (Ref # 53066C)	53066-0274-MA	1
NUT,LOCK,12MM,BLACK (Ref # 92015)	92015-1190	1
WASHER,7X18X1.2 (Ref # 92022)	92022-1545	2
WASHER,10.5X20X1 (Ref # 92022A)	92022-239	4
PIN (Ref # 92043)	92043-7503	1
SPRING (Ref # 92145)	92145-7507	1
BOLT,FLANGED,12X117 (Ref # 92150)	92150-1895	1
NUT,FLANGED,LOCK,8MM (Ref # 92210)	92210-0005	16
NUT,LOCK,10MM (Ref # 92210A)	92210-0278	4
BOLT-FLANGED,6X16 (Ref # 130)	130BB0616	10
BOLT-FLANGED,10X20 (Ref # 130A)	130BB1020	8
BOLT-FLANGED,10X25 (Ref # 130B)	130BB1025	4
WASHER-PLAIN (Ref # 411)	411AB1200	2

© 2026 Kawasaki Motors Corp., U.S.A.

2011 MULE™ 4010 TRANS4x4® PARTS LIST

Seat(RBF/RBFA)

ITEM NAME	PART NUMBER	QUANTITY
WASHER-SPRING,10MM (Ref # 462)	462DB1000	4
CIRCLIP-TYPE-E (Ref # 482)	482EA0200	2
CIRCLIP-TYPE-E,8MM (Ref # 482A)	482EA8000	1

© 2026 Kawasaki Motors Corp., U.S.A.