2011 MULE™ 4010 4x4

PARTS DIAGRAM

Fuel Evaporative System(MBF-MDF)

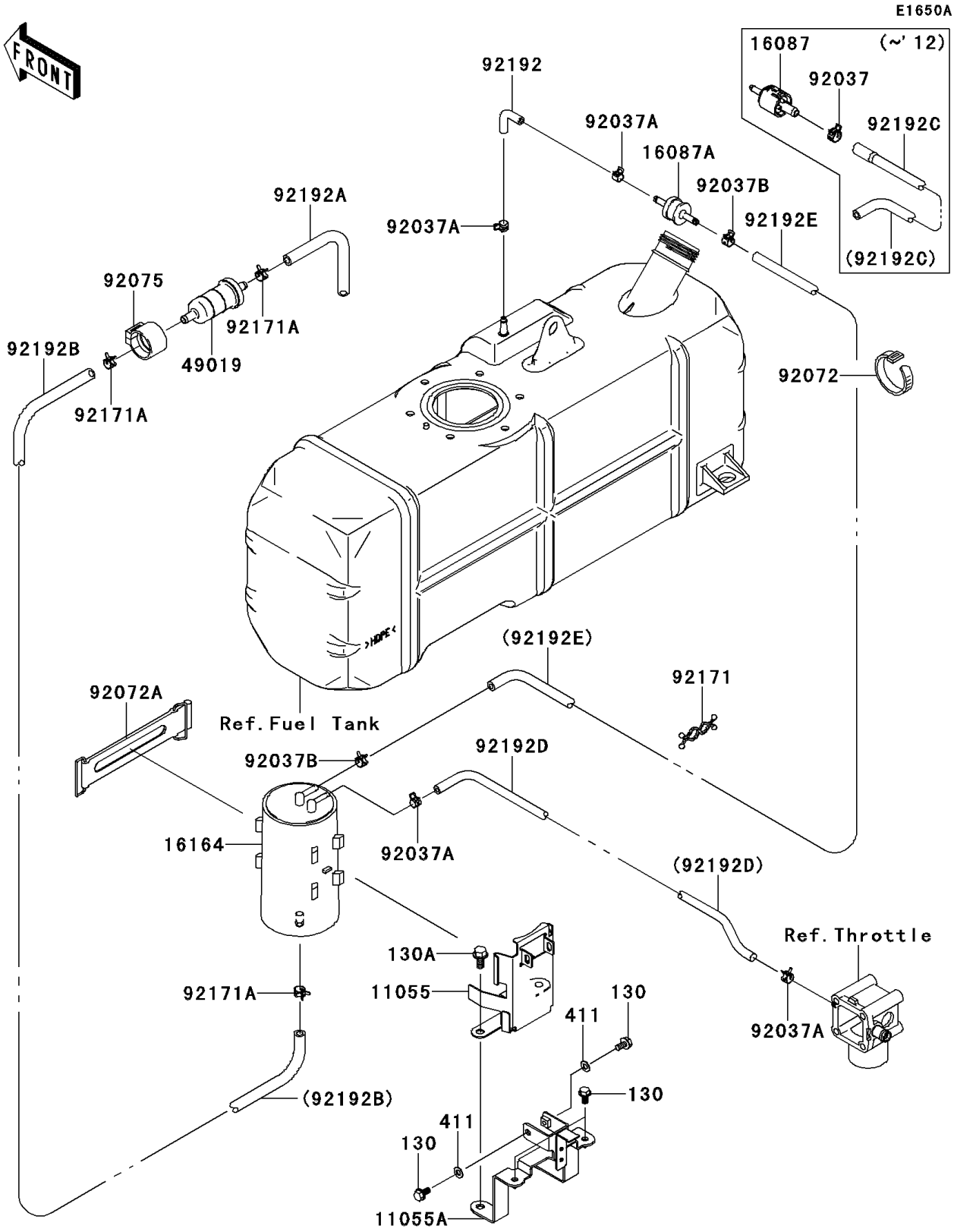

© 2026 Kawasaki Motors Corp., U.S.A.

2011 MULE™ 4010 4x4

PARTS LIST

Fuel Evaporative System(MBF-MDF)

Kawasaki
Let the Good Times Roll®

ITEM NAME	PART NUMBER	QUANTITY
BRACKET,UPP (Ref # 11055)	11055-0263	1
BRACKET,LWR (Ref # 11055A)	11055-0407	1
CANISTER (Ref # 16164)	16164-0007	1
FILTER-FUEL (Ref # 49019)	49019-1055	1
CLAMP,TUBE (Ref # 92037A)	92037-1461	4
CLAMP,TUBE (Ref # 92037B)	92037-1505	1
BAND,L=186 (Ref # 92072)	92072-056	1
BAND,L=168 (Ref # 92072A)	92072-1306	1
DAMPER,FUEL FILTER (Ref # 92075)	92075-1853	1
CLAMP (Ref # 92171)	92171-0476	1
CLAMP (Ref # 92171A)	92171-0515	3
TUBE,FUEL TANK-CHECK VALVE (Ref # 92192)	92192-0067	1
TUBE,FILTER-AIR (Ref # 92192A)	92192-0609	1
TUBE,CANISTER-FUEL FILTER (Ref # 92192B)	92192-0713	1
TUBE,4.5X9.5X460 (Ref # 92192D)	92192-0909	1
BOLT-FLANGED,6X12 (Ref # 130)	130BB0612	4
BOLT-FLANGED,8X16 (Ref # 130A)	130BB0816	2
WASHER-PLAIN,6.5X13X1 (Ref # 411)	411AB0600	2

© 2026 Kawasaki Motors Corp., U.S.A.