1999 ZRX1100 PARTS DIAGRAM

Front Wheel

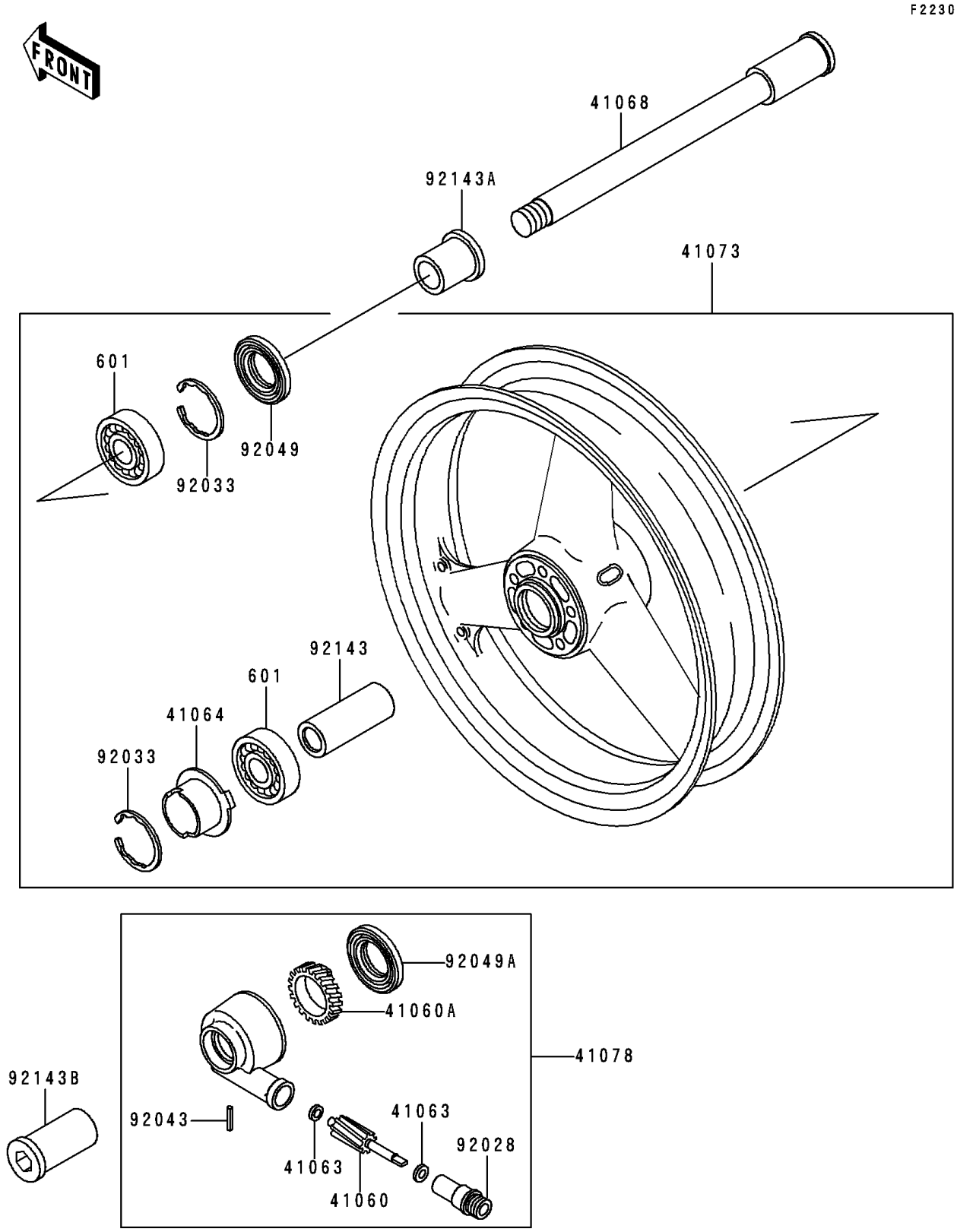

© 2024 Kawasaki Motors Corp., U.S.A.

1999 ZRX1100 PARTS LIST

Front Wheel

ITEM NAME	PART NUMBER	QUANTITY
BEARING-BALL,#6005UU (Ref # 601)	601B6005UU	2
GEAR-METER SCREW,9T (Ref # 41060)	41060-1140	1
GEAR-METER SCREW,24T (Ref # 41060A)	41060-1141	1
WASHER,5.1X9X0.4 (Ref # 41063)	41063-001	2
RECEIVER-SPEEDOMETER (Ref # 41064)	41064-1055	1
AXLE,FR (Ref # 41068)	41068-1327	1
WHEEL-ASSY,FR,BLACK (Ref # 41073)	41073-1618-R2	1
CASE-ASSY-METER GEAR (Ref # 41078)	41078-1082	1
BUSHING,METER GEAR CASE (Ref # 92028)	92028-1634	1
RING-SNAP,47MM (Ref # 92033)	92033-1042	2
PIN,SPRING,3X18 (Ref # 92043)	92043-1454	1
SEAL-OIL,BJN 32 47 5 (Ref # 92049)	92049-1377	1
SEAL-OIL,BJN-C2 35 52 5 (Ref # 92049A)	92049-1378	1
COLLAR,FR HUB,L=94 (Ref # 92143)	92143-1476	1
COLLAR,FR AXLE,RH,L=17.5 (Ref # 92143A)	92143-1477	1
COLLAR,FR AXLE,LH,L=44.5 (Ref # 92143B)	92143-1478	1

© 2024 Kawasaki Motors Corp., U.S.A.