2019 MULE™ 4010 TRANS4x4® CAMO PARTS DIAGRAM

Bevel Gear Case

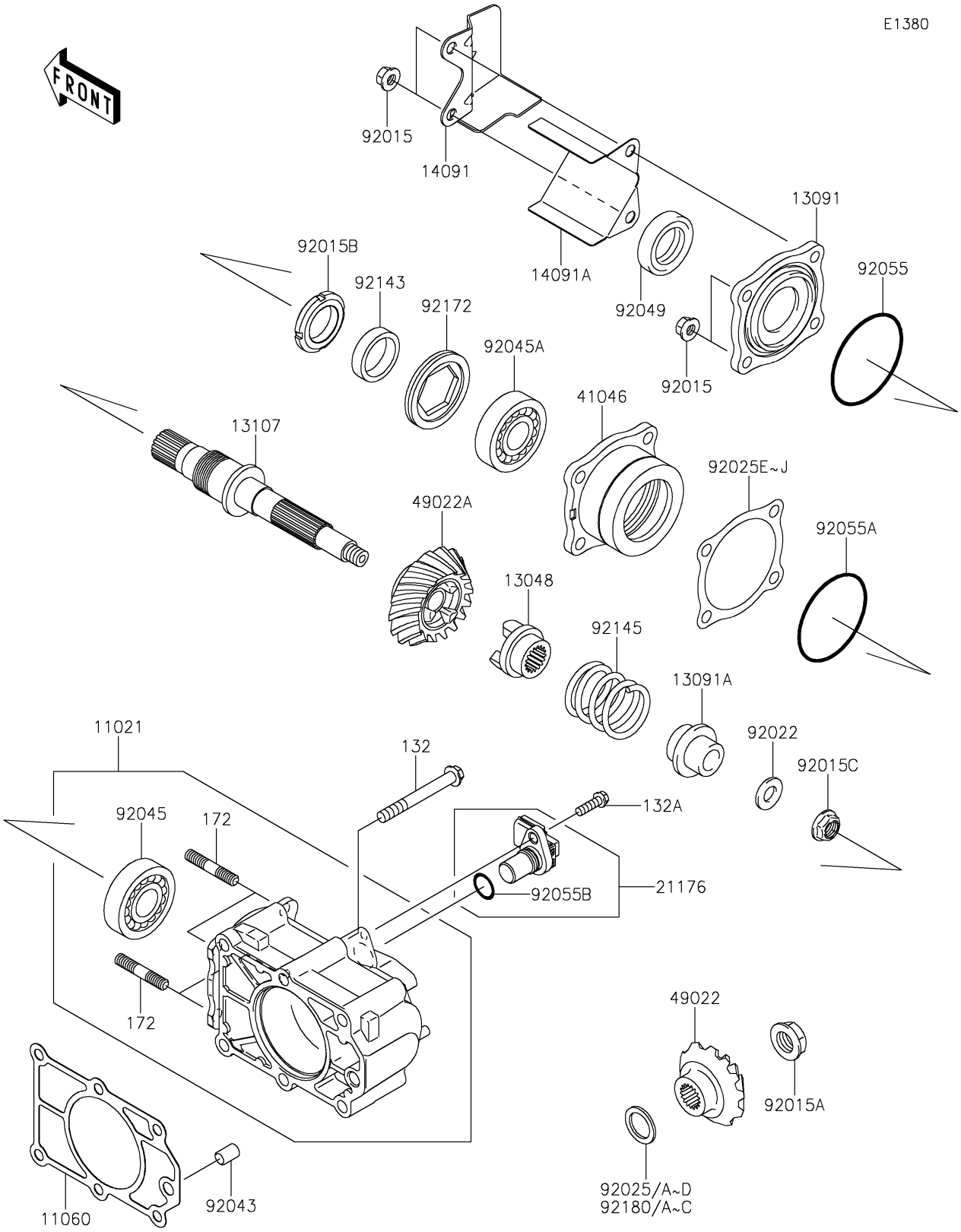

© 2024 Kawasaki Motors Corp., U.S.A.

2019 MULE™ 4010 TRANS4x4® CAMO PARTS LIST

Bevel Gear Case

ITEM NAME	PART NUMBER	QUANTITY
CASE-ASSY (Ref # 11021)	11021-0025	1
GASKET,GEAR CASE (Ref # 11060)	11060-1311	1
CAM-DAMPER (Ref # 13048)	13048-1089	1
HOLDER,GEAR CASE (Ref # 13091)	13091-1620	1
HOLDER,CAM DAMPER (Ref # 13091A)	13091-1810	1
SHAFT,BEVEL GEAR (Ref # 13107)	13107-1523	1
COVER (Ref # 14091)	14091-0939	1
COVER (Ref # 14091A)	14091-1672	1
SENSOR,SPEED (Ref # 21176)	21176-1104	1
HOUSING-BEARING (Ref # 41046)	41046-1083	1
GEAR-BEVEL,15T (Ref # 49022)	49022-0615	1
GEAR-BEVEL,18T (Ref # 49022A)	49022-1204	1
NUT,8MM (Ref # 92015)	92015-1402	4
NUT,16MM (Ref # 92015A)	92015-1581	1
NUT,30MM (Ref # 92015B)	92015-1858	1
NUT,12MM (Ref # 92015C)	92015-1920	1
WASHER,12X24X2.3 (Ref # 92022)	92022-1890	1
SHIM,20.3X28X1.3 (Ref # 92025)	92025-1533	AR
SHIM,20.3X28X0.7 (Ref # 92025A)	92025-1534	AR
SHIM,20.3X28X0.15 (Ref # 92025B)	92025-1573	AR
SHIM,20.3X28X0.20 (Ref # 92025C)	92025-1574	AR
SHIM,20.3X28X1.1 (Ref # 92025D)	92025-1575	AR
SHIM,T=1.00 (Ref # 92025E)	92025-1858	AR
SHIM,T=0.10 (Ref # 92025F)	92025-1859	AR
SHIM,T=0.15 (Ref # 92025G)	92025-1860	AR
SHIM,T=0.50 (Ref # 92025H)	92025-1861	AR
SHIM,T=0.80 (Ref # 92025I)	92025-1862	AR
SHIM,T=1.20 (Ref # 92025J)	92025-1863	AR
PIN,DOWEL,10X14 (Ref # 92043)	92043-1037	1

© 2024 Kawasaki Motors Corp., U.S.A.

2019 MULE™ 4010 TRANS4x4® CAMO PARTS LIST

Bevel Gear Case

ITEM NAME	PART NUMBER	QUANTITY
BEARING-BALL,6205CM (Ref # 92045)	92045-1200	1
BEARING-BALL,6006CM (Ref # 92045A)	92045-1201	1
SEAL-OIL (Ref # 92049)	92049-1288	1
RING-O,66.5MM (Ref # 92055)	92055-1287	1
RING-O,63.6X2.4 (Ref # 92055A)	92055-1294	1
RING-O (Ref # 92055B)	92055-1718	1
COLLAR (Ref # 92143)	92143-1600	1
SPRING (Ref # 92145)	92145-1542	1
SCREW,SET,58X10 (Ref # 92172)	92172-0316	1
SHIM,20.3X28X0.8 (Ref # 92180)	92180-0288	AR
SHIM,20.3X28X0.9 (Ref # 92180A)	92180-0289	AR
SHIM,20.3X28X1.0 (Ref # 92180B)	92180-0290	AR
SHIM,20.3X28X1.2 (Ref # 92180C)	92180-0291	AR
BOLT-FLANGED-SMALL,8X70 (Ref # 132)	132BA0870	6
BOLT-FLANGED-SMALL,6X20 (Ref # 132A)	132BD0620	1
BOLT-STUD,8X30 (Ref # 172)	172BA0830	4

© 2024 Kawasaki Motors Corp., U.S.A.