# 1993 ZR1100 Zephyr PARTS DIAGRAM

## Chassis Electrical Equipment

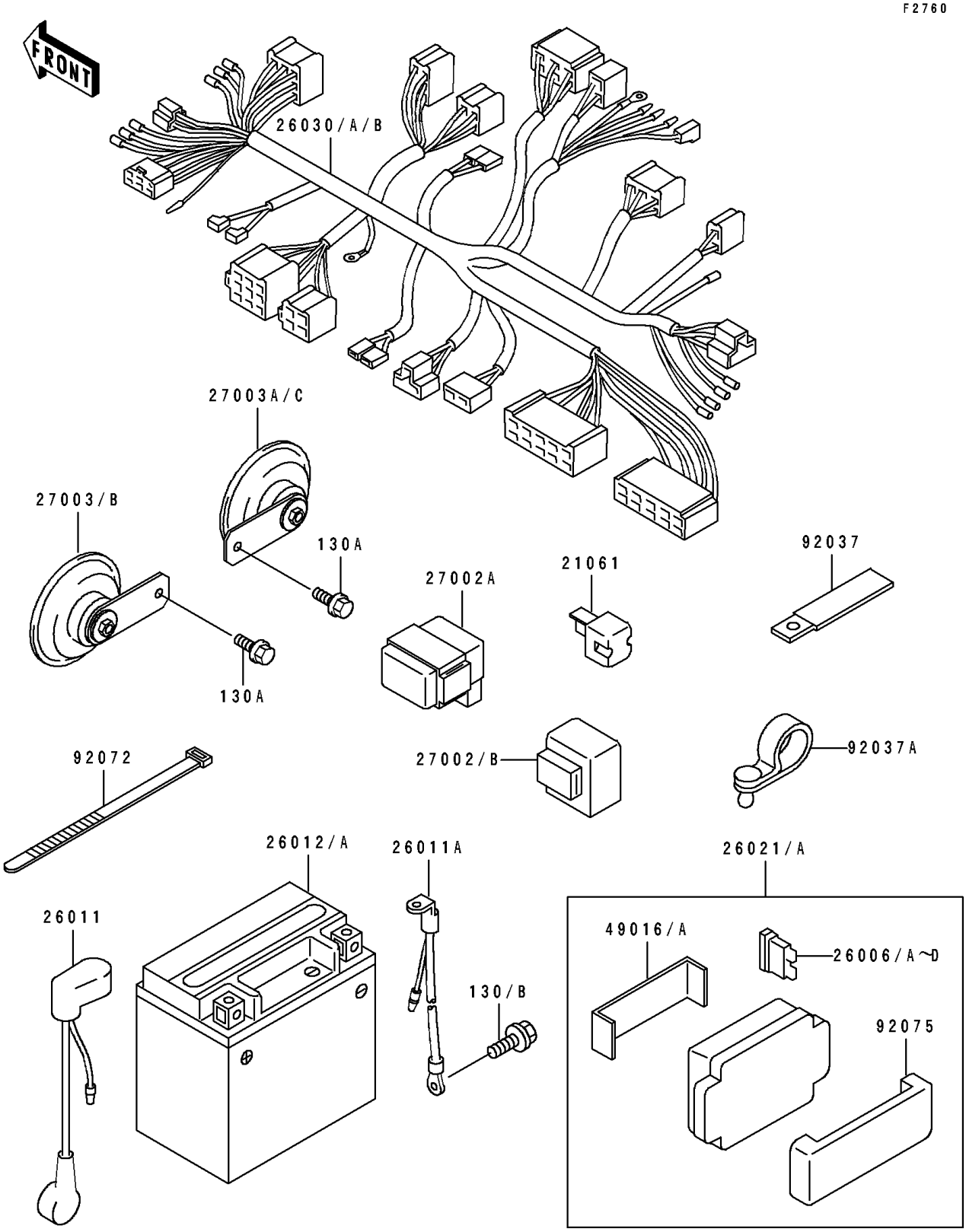


© 2024 Kawasaki Motors Corp., U.S.A.

# 1993 ZR1100 Zephyr PARTS LIST

## Chassis Electrical Equipment

| ITEM NAME | PART NUMBER | QUANTITY |
|---|---|---|
| RECTIFIER (Ref # 21061) | 21061-1003 | 1 |
| FUSE,30A-G (Ref # 26006) | 26006-1006 | 2 |
| FUSE,10A-R (Ref # 26006A) | 26006-1007 | 4 |
| WIRE-LEAD,BATTERY(+) (Ref # 26011) | 26011-1531 | 1 |
| WIRE-LEAD,BATTERY(-) (Ref # 26011A) | 26011-1532 | 1 |
| BATTERY,FTH16-12B,12V 14AH (Ref # 26012) | 26012-1275 | 1 |
| JUNCTION BOX (Ref # 26021) | 26021-1079 | 1 |
| HARNESS,MAIN (Ref # 26030) | 26030-1125 | 1 |
| RELAY-ASSY,TURN SIGNAL (Ref # 27002) | 27002-1060 | 1 |
| RELAY-ASSY,HEAD LAMP (Ref # 27002A) | 27002-1078 | 1 |
| HORN,LH (Ref # 27003) | 27003-1360 | 1 |
| HORN,RH (Ref # 27003A) | 27003-1361 | 1 |
| COVER-SEAL,FUSE (Ref # 49016) | 49016-1106 | 1 |
| CLAMP,WIRING HARNESS (Ref # 92037) | 92037-1069 | 2 |
| CLAMP (Ref # 92037A) | 92037-1290 | 2 |
| BAND,L=185 (Ref # 92072) | 92072-1195 | 5 |
| DAMPER,JUNCTION BOX (Ref # 92075) | 92075-1688 | 1 |
| BOLT-FLANGED,6X10 (Ref # 130) | 130G0610 | 1 |
| BOLT-FLANGED (Ref # 130A) | 130J0812 | 2 |

© 2024 Kawasaki Motors Corp., U.S.A.