1992 ZR1100 Zephyr PARTS DIAGRAM

Side Covers/Chain Cover

F2610

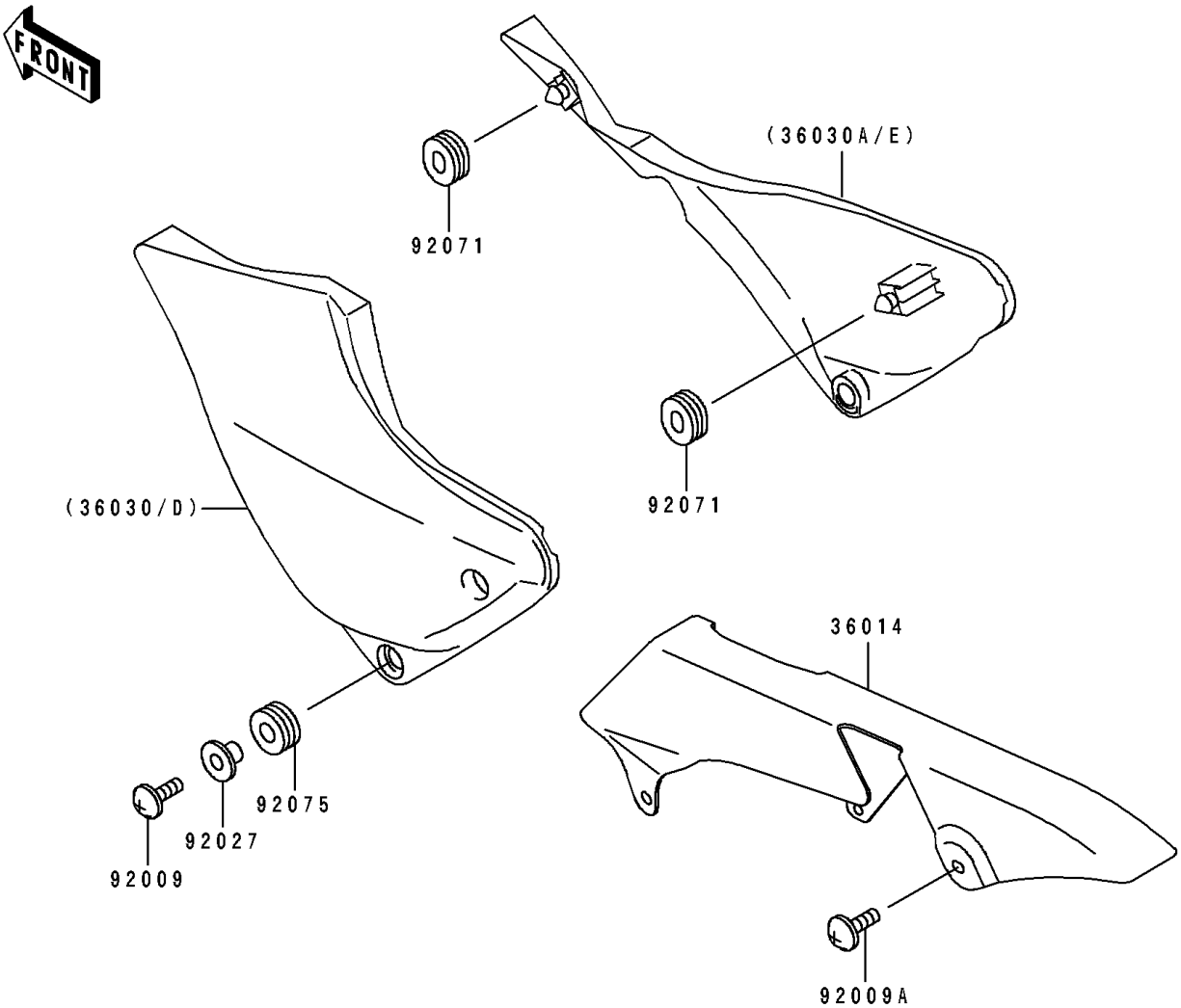

36030/A

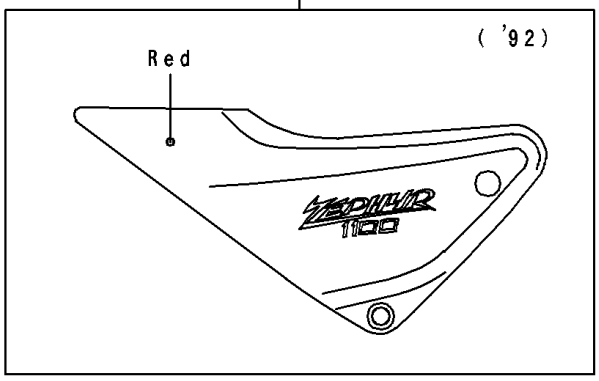

36030D/E

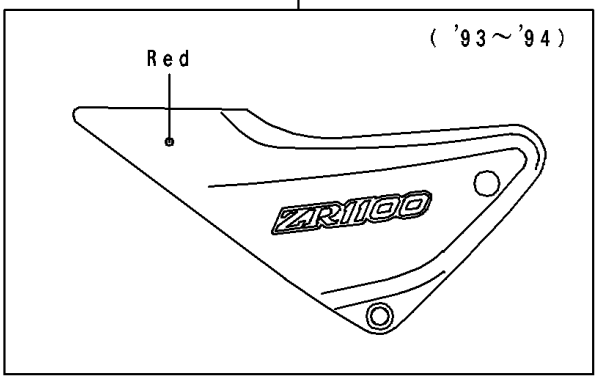

© 2024 Kawasaki Motors Corp., U.S.A.

1992 ZR1100 Zephyr PARTS LIST

Side Covers/Chain Cover

ITEM NAME	PART NUMBER	QUANTITY
CASE-CHAIN (Ref # 36014)	36014-1180	1
COVER-SIDE,LH,L.V.RED (Ref # 36030)	36030-5097-P5	1
COVER-SIDE,RH,L.V.RED (Ref # 36030A)	36030-5098-P5	1
SCREW,6X18,BLACK (Ref # 92009)	92009-1181	2
SCREW,6X10,WHITE (Ref # 92009A)	92009-1286	3
COLLAR,L=9.1,BLACK (Ref # 92027)	92027-1935	2
GROMMET (Ref # 92071)	92071-056	4
DAMPER (Ref # 92075)	92075-1634	2

© 2024 Kawasaki Motors Corp., U.S.A.