2024 KX™250X

PARTS DIAGRAM

Frame

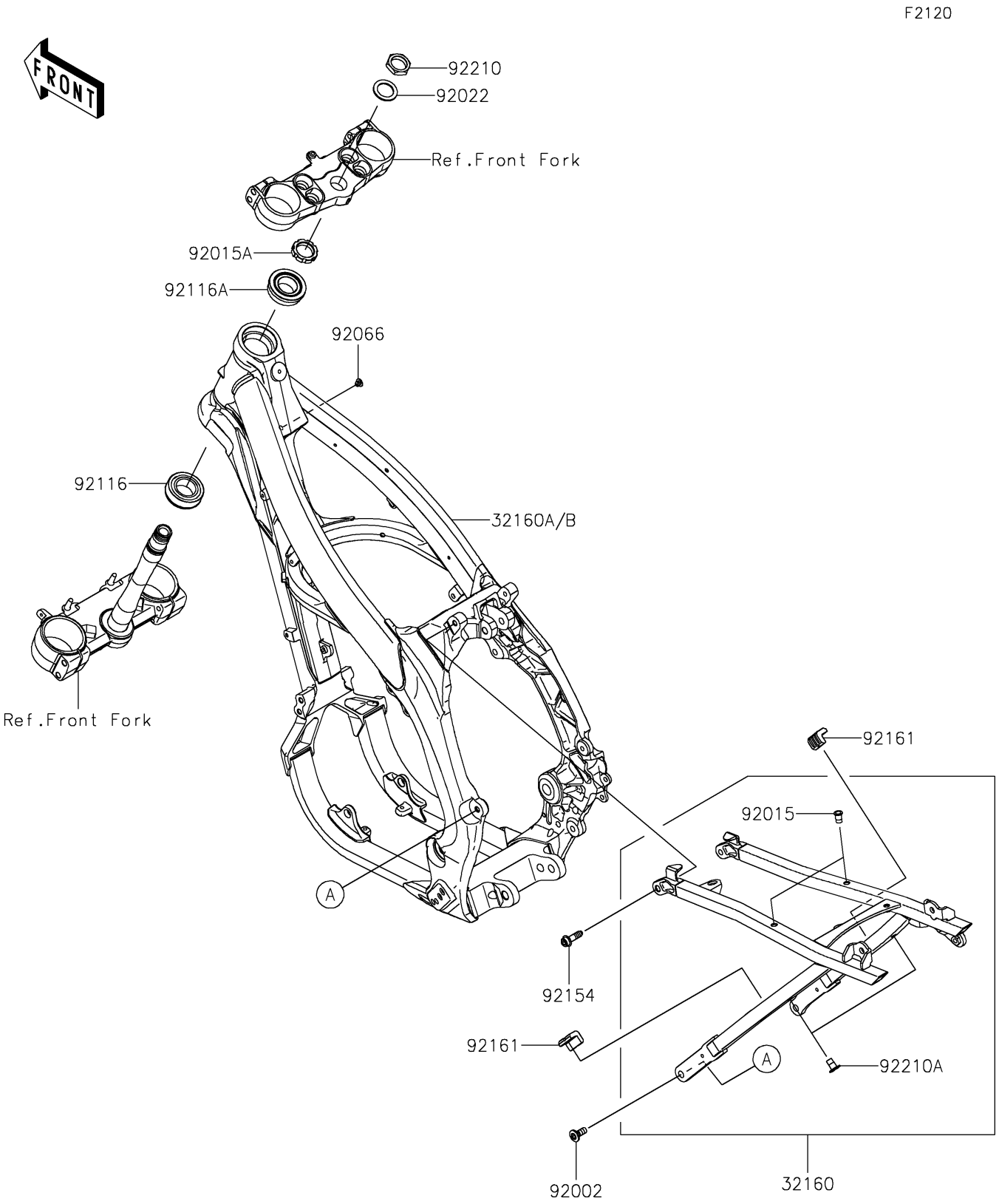

© 2026 Kawasaki Motors Corp., U.S.A.

2024 KX™250X

PARTS LIST

Frame

ITEM NAME	PART NUMBER	QUANTITY
FRAME-COMP,RR (Ref # 32160)	32160-0976	1
FRAME-COMP,MAIN (Ref # 32160B)	32160-1933	1
BOLT,SOCKET,8X20 (Ref # 92002)	92002-1736	2
NUT,POP,6MM,L=15 (Ref # 92015)	92015-1791	2
NUT,STEERING STEM,28MM (Ref # 92015A)	92015-1861	1
WASHER,25X36X2.3 (Ref # 92022)	92022-250	1
PLUG (Ref # 92066)	92066-1547	1
BEARING-ROLLER,HI-CAP32006JRRS (Ref # 92116)	92116-1069	1
BEARING-ROLLER,HI-CAP320/28JRR (Ref # 92116A)	92116-1076	1
BOLT,SOCKET,8X28 (Ref # 92154)	92154-2991	2
DAMPER (Ref # 92161)	92161-2175	2
NUT,24MM (Ref # 92210)	92210-0066	1
NUT,LARGE FLANGE,6MM,L=16.5 (Ref # 92210A)	92210-1623	2

© 2026 Kawasaki Motors Corp., U.S.A.