2024 NINJA® ZX™-4RR ABS

PARTS DIAGRAM

Accessory(Radiator Trim)

Kawasaki
Let the Good Times Roll®

F2910

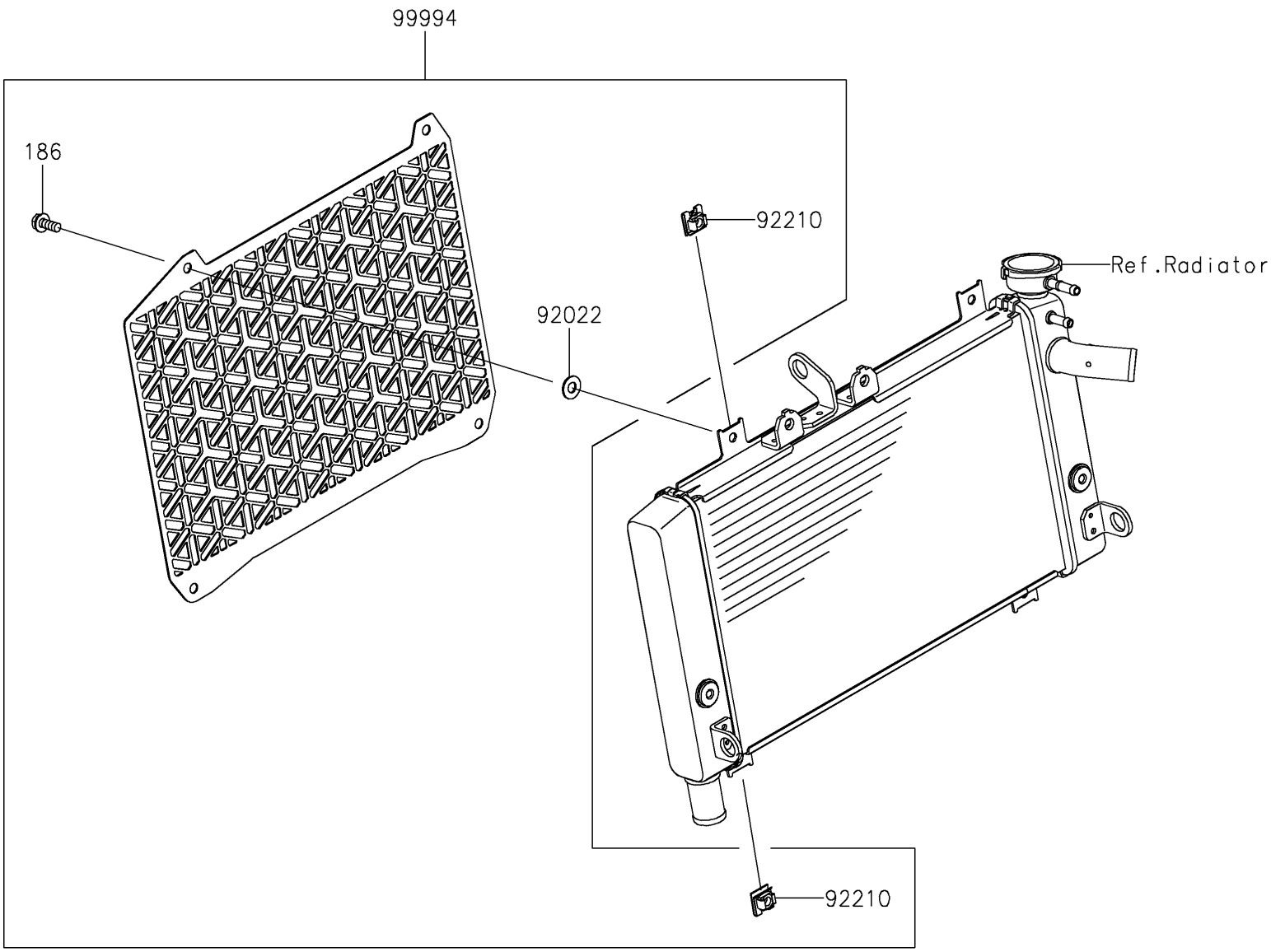

© 2026 Kawasaki Motors Corp., U.S.A.

2024 NINJA® ZX™-4RR ABS

PARTS LIST

Accessory(Radiator Trim)

ITEM NAME	PART NUMBER	QUANTITY
WASHER,7X16X1.2 (Ref # 92022)	92022-024	4
NUT,CLIP,6MM (Ref # 92210)	92210-0867	4
RADIATOR TRIM (Ref # 99994)	99994-1887	1
BOLT-UPSET-WP (Ref # 186)	186BA0616	4

© 2026 Kawasaki Motors Corp., U.S.A.