2021 KX™250 PARTS DIAGRAM

Water Pump

E3031

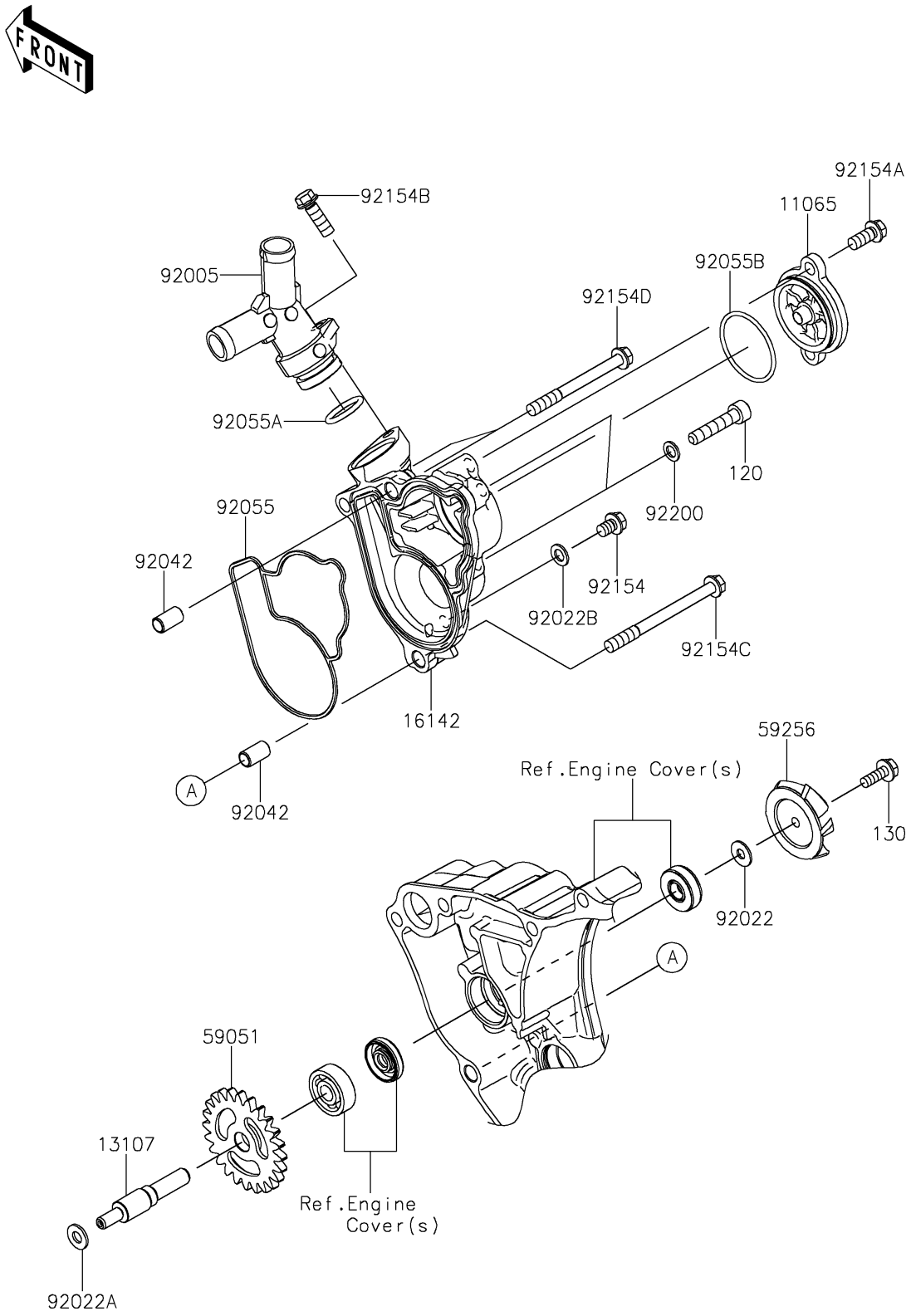

© 2026 Kawasaki Motors Corp., U.S.A.

2021 KX™250 PARTS LIST

Water Pump

ITEM NAME	PART NUMBER	QUANTITY
CAP (Ref # 11065)	11065-0087	1
SHAFT,WATER PUMP (Ref # 13107)	13107-0916	1
COVER-PUMP,WATER (Ref # 16142)	16142-0738	1
GEAR-SPUR,WATER PUMP (Ref # 59051)	59051-0061	1
IMPELLER (Ref # 59256)	59256-1065	1
FITTING,WATER PUMP (Ref # 92005)	92005-0839	1
WASHER,5.2X13X1 (Ref # 92022)	92022-1380	1
WASHER,6X12.8X1.2 (Ref # 92022A)	92022-1827	1
WASHER,6.2X11X1 (Ref # 92022B)	92022-304	1
PIN,DOWEL,6.3X8X14 (Ref # 92042)	92042-007	2
RING-O,WATER PUMP (Ref # 92055)	92055-0010	1
RING-O,18.8X2.4 (Ref # 92055A)	92055-1308	1
RING-O,35.2X1.9 (Ref # 92055B)	92055-520	1
BOLT,FLANGED,6X8 (Ref # 92154)	92154-2962	1
BOLT,FLANGED,6X14 (Ref # 92154A)	92154-2964	2
BOLT,FLANGED,6X18 (Ref # 92154B)	92154-2976	1
BOLT,FLANGED,6X70 (Ref # 92154C)	92154-2981	1
BOLT,FLANGED,6X60 (Ref # 92154D)	92154-4134	2
WASHER,6.1X10.0X1.0 (Ref # 92200)	92200-0190	2
BOLT-SOCKET,6X30 (Ref # 120)	120CA0630	2
BOLT-FLANGED,5X14 (Ref # 130)	130CD0514	1

© 2026 Kawasaki Motors Corp., U.S.A.