2022 VERSYS® 650 PARTS DIAGRAM

Stand(s)

F2190

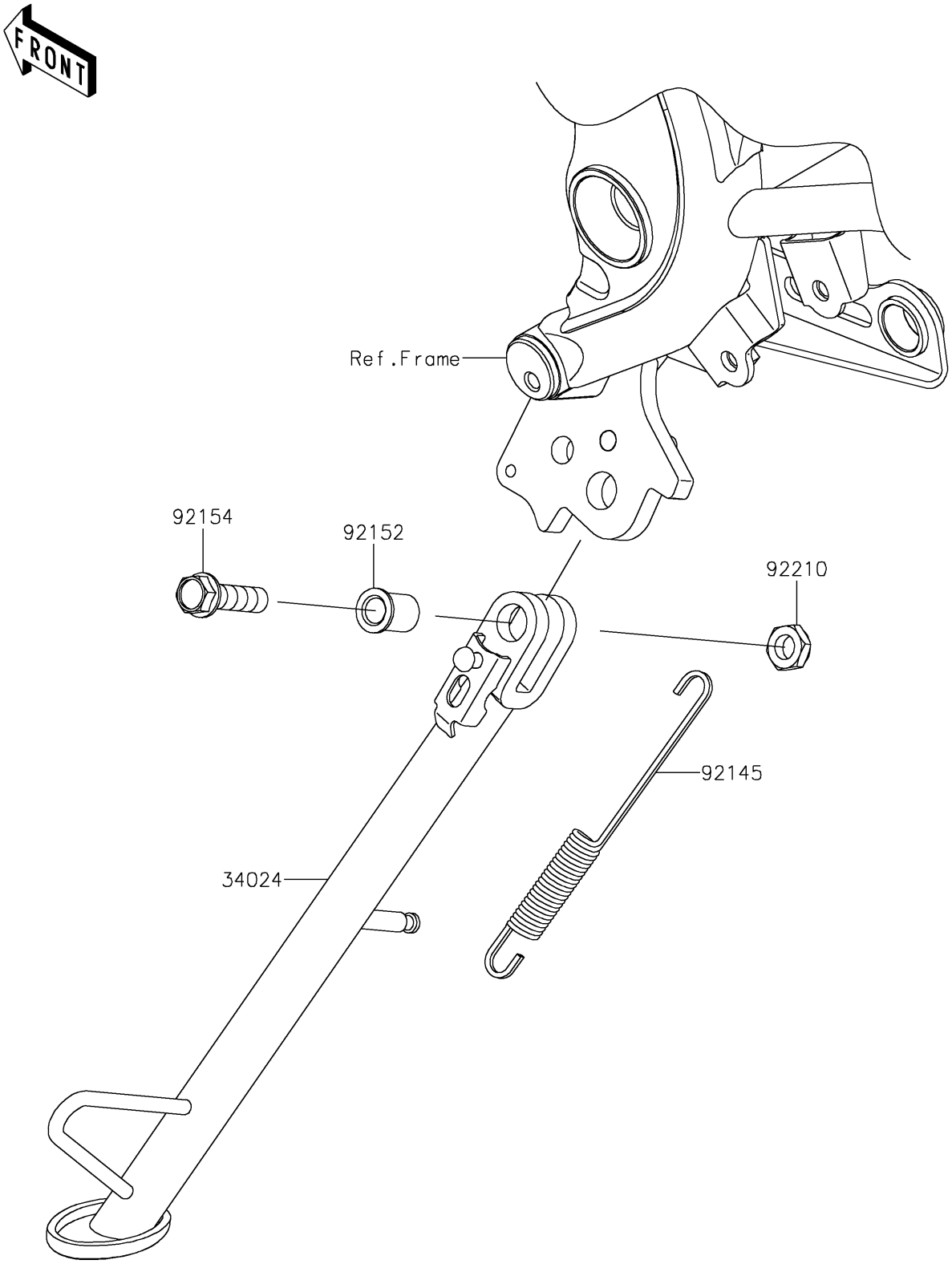

© 2025 Kawasaki Motors Corp., U.S.A.

2022 VERSYS® 650 PARTS LIST

Stand(s)

ITEM NAME	PART NUMBER	QUANTITY
STAND-SIDE (Ref # 34024)	34024-0126	1
SPRING,SIDE STAND (Ref # 92145)	92145-0813	1
COLLAR,10.2X15X20.1 (Ref # 92152)	92152-1914	1
BOLT,FLANGED,10X37 (Ref # 92154)	92154-1352	1
NUT,LOCK,10MM (Ref # 92210)	92210-0784	1

© 2025 Kawasaki Motors Corp., U.S.A.