2011 KLX®140L PARTS DIAGRAM

Brake Pedal

F2260

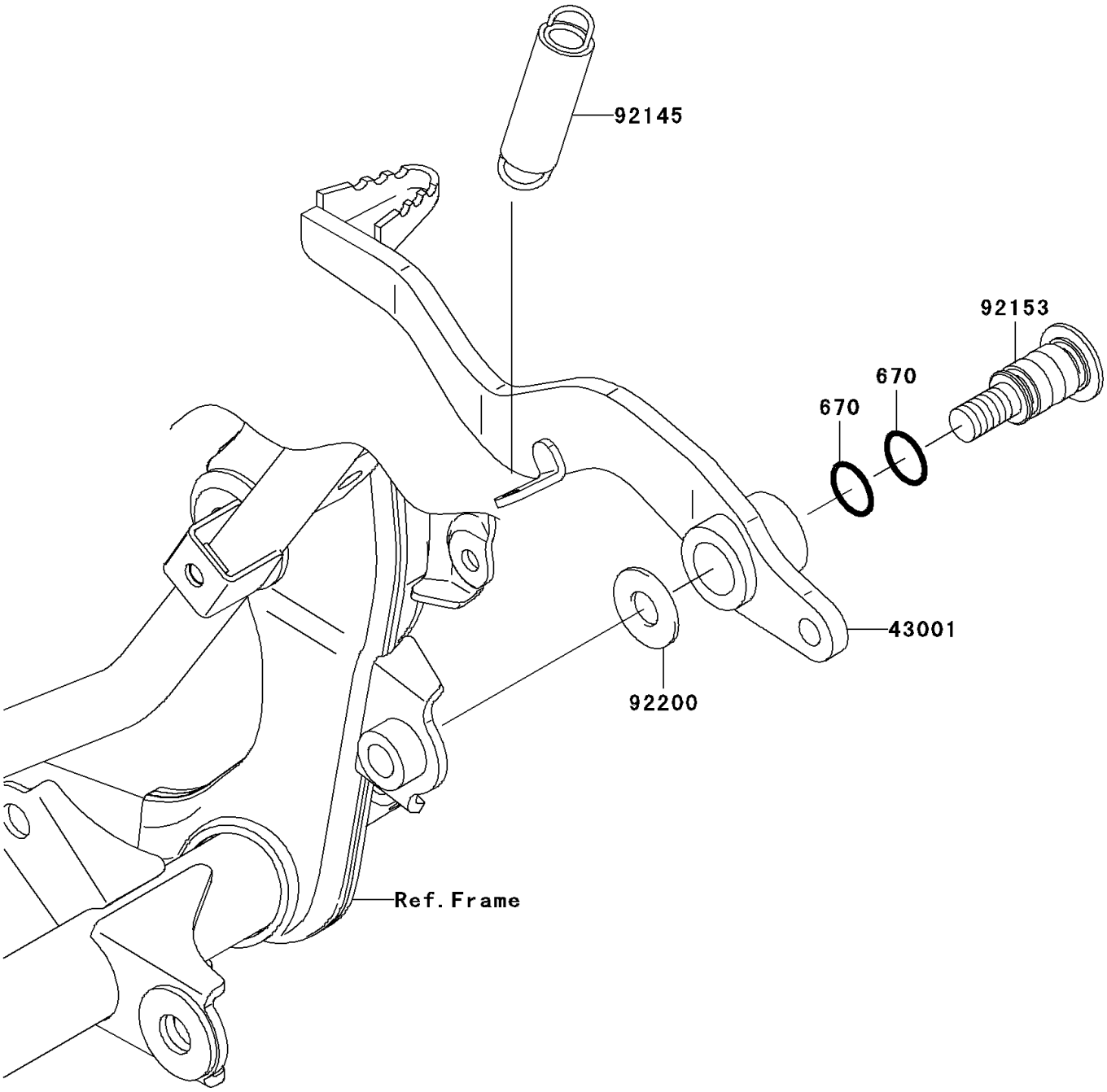

© 2024 Kawasaki Motors Corp., U.S.A.

2011 KLX®140L PARTS LIST

Brake Pedal

ITEM NAME	PART NUMBER	QUANTITY
O RING,12MM (Ref # 670)	670B2012	2
LEVER-BRAKE,PEDAL (Ref # 43001)	43001-0086	1
SPRING,BRAKE PEDAL RETURN (Ref # 92145)	92145-0591	1
BOLT,BRAKE PEDAL,10MM (Ref # 92153)	92153-0974	1
WASHER,10.5X24X1.5 (Ref # 92200)	92200-0154	1

© 2024 Kawasaki Motors Corp., U.S.A.