2023 NINJA® 400 KRT EDITION

PARTS DIAGRAM

Accessory(Pillion Seat Cover)

F2910

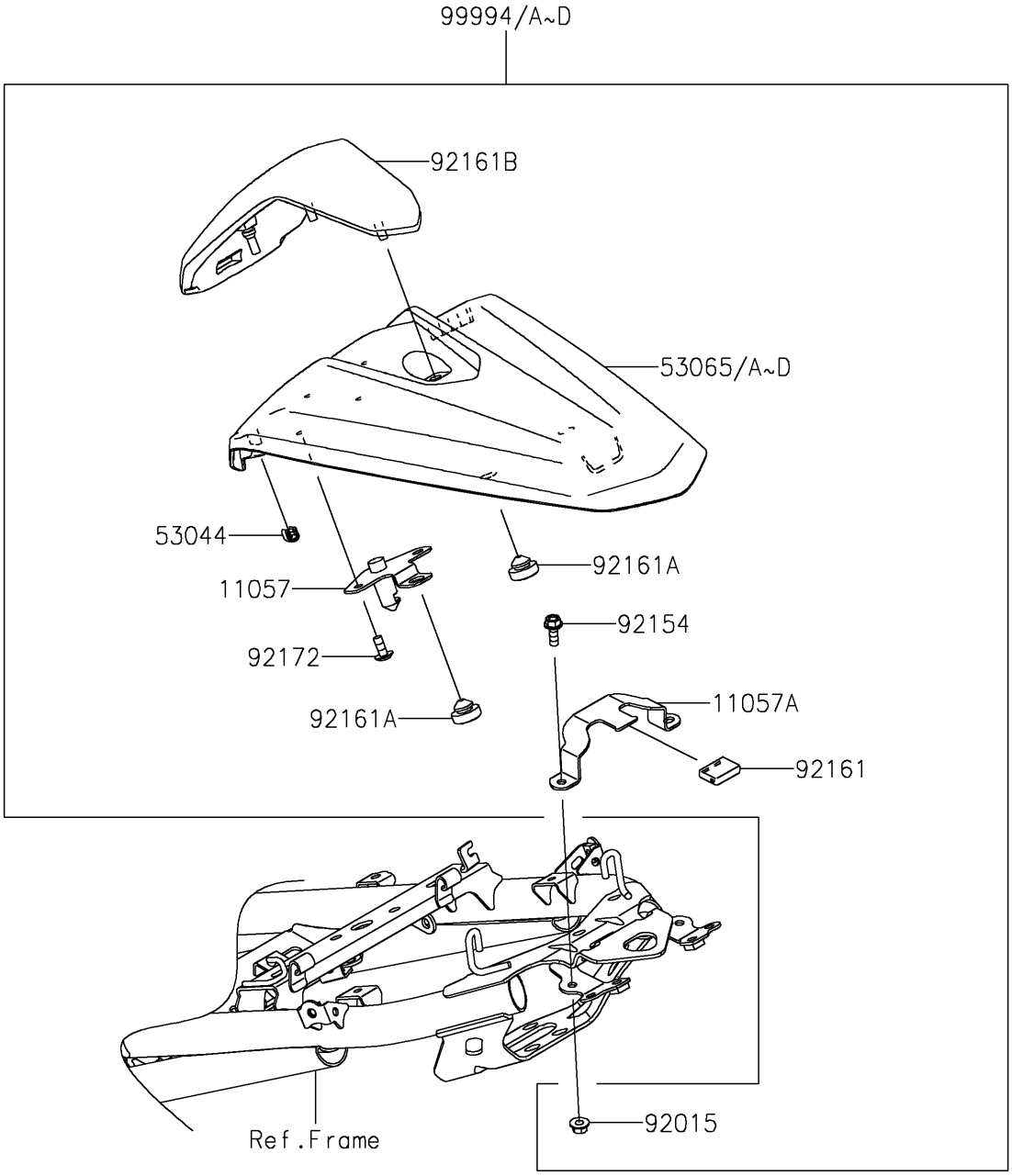

© 2026 Kawasaki Motors Corp., U.S.A.

2023 NINJA® 400 KRT EDITION

PARTS LIST

Accessory(Pillion Seat Cover)

ITEM NAME	PART NUMBER	QUANTITY
BRACKET,COVER FIX (Ref # 11057)	11057-1241	1
BRACKET,FRAME FIX (Ref # 11057A)	11057-1242	1
TRIM,L=20 (Ref # 53044)	53044-0021	2
COVER SEAT,M.C.GRAY (Ref # 53065)	53065-0044-51A	1
COVER SEAT,P.B.WHITE (Ref # 53065A)	53065-0044-54X	1
COVER SEAT,L.GREEN (Ref # 53065D)	53065-0044-777	1
NUT,FLANGED,5MM (Ref # 92015)	92015-1656	2
BOLT,FLANGED,5X14 (Ref # 92154)	92154-2894	2
DAMPER,15X21X5.5 (Ref # 92161)	92161-1472	1
DAMPER,9.5X18X6 (Ref # 92161A)	92161-1473	3
DAMPER,SEAT COVER (Ref # 92161B)	92161-1988	1
SCREW,5X12 (Ref # 92172)	92172-0821	2
PILLION SEAT COVER,M.C.GRAY (Ref # 99994)	99994-1038-51A	1
PILLION SEAT COVER,P.B.WHT (Ref # 99994A)	99994-1038-54X	1
PILLION SEAT COVER,L.GREEN (Ref # 99994D)	99994-1038-777	1

© 2026 Kawasaki Motors Corp., U.S.A.