2023 Ninja 400

PARTS DIAGRAM

Tires

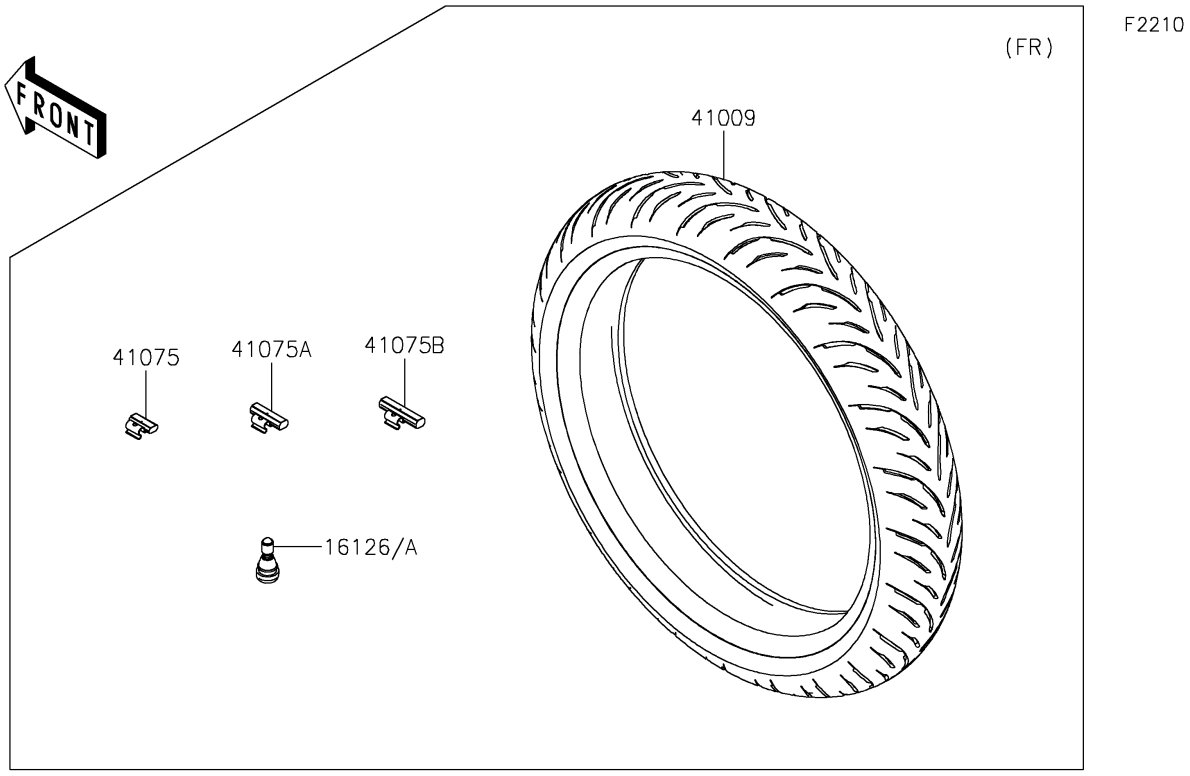

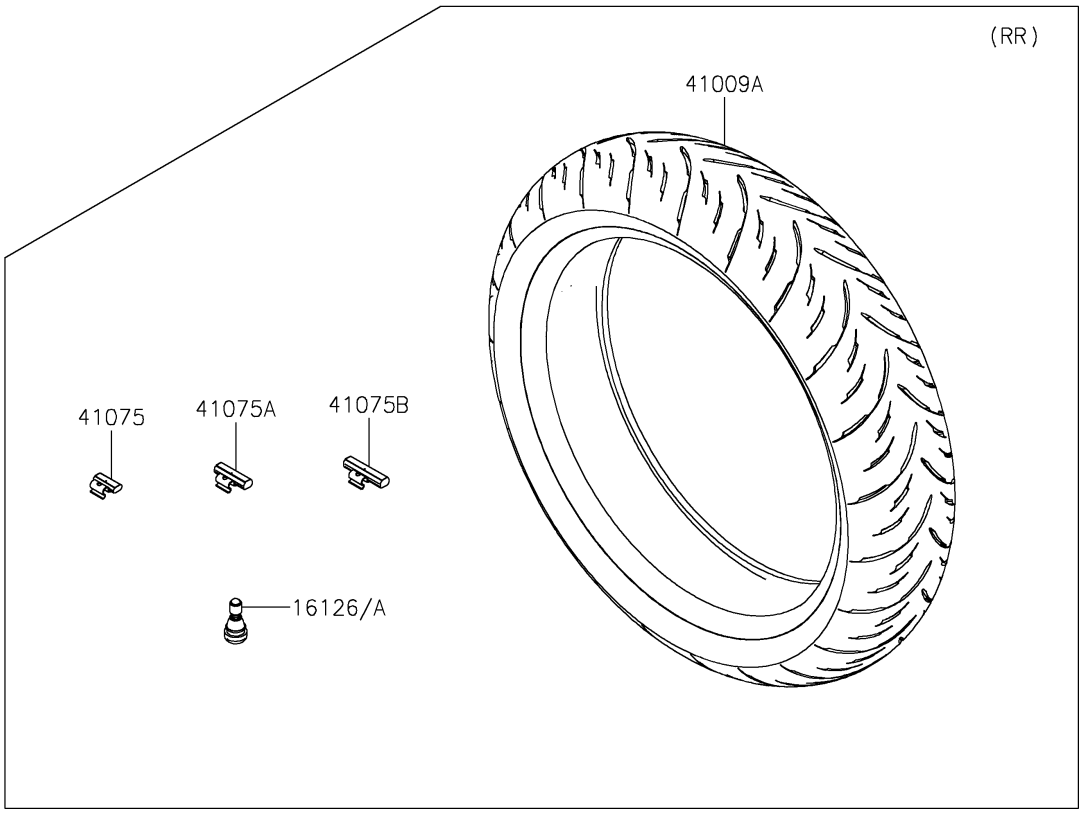

© 2026 Kawasaki Motors Corp., U.S.A.

2023 Ninja 400

PARTS LIST

Tires

ITEM NAME	PART NUMBER	QUANTITY
VALVE,TIRE (Ref # 16126)	16126-0770	2
TIRE,FR,110/70R17 54H,GPR-300F (Ref # 41009)	41009-0773	1
TIRE,RR,150/60R17 66H,GPR-300 (Ref # 41009A)	41009-0774	1
BALANCER-WHEEL,10G,SILVER (Ref # 41075)	41075-0007	AR
BALANCER-WHEEL,20G,SILVER (Ref # 41075A)	41075-0008	AR
BALANCER-WHEEL,30G,SILVER (Ref # 41075B)	41075-0009	AR

© 2026 Kawasaki Motors Corp., U.S.A.