2022 NINJA® 400 PARTS DIAGRAM

Camshaft(s)/Tensioner

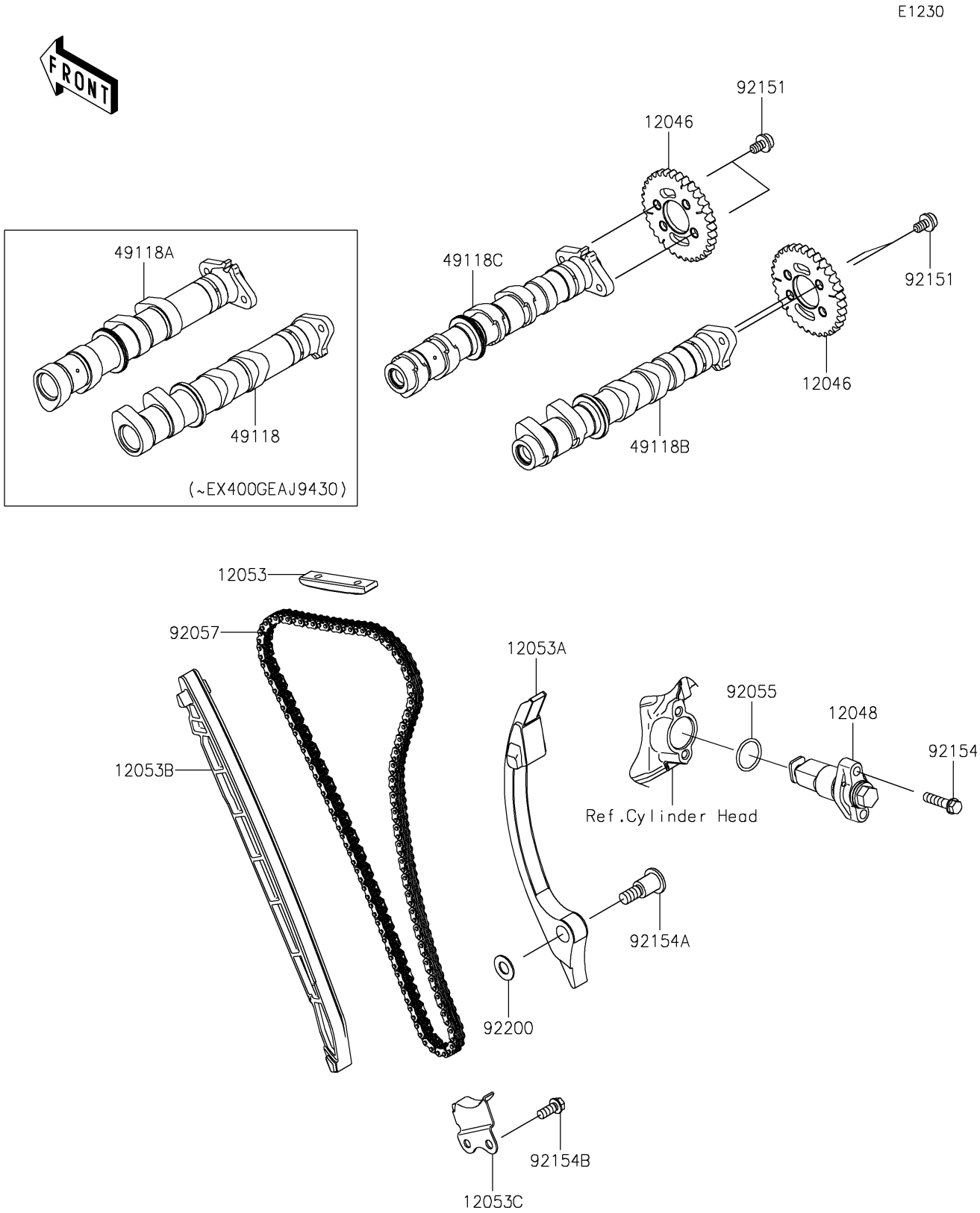

© 2026 Kawasaki Motors Corp., U.S.A.

2022 NINJA® 400 PARTS LIST

Camshaft(s)/Tensioner

ITEM NAME	PART NUMBER	QUANTITY
SPROCKET,34T (Ref # 12046)	12046-0599	2
TENSIONER-ASSY (Ref # 12048)	12048-0111	1
GUIDE-CHAIN,UPP (Ref # 12053)	12053-0051	1
GUIDE-CHAIN,RR (Ref # 12053A)	12053-0244	1
GUIDE-CHAIN,FR (Ref # 12053B)	12053-0245	1
GUIDE-CHAIN,LWR (Ref # 12053C)	12053-0246	1
CAMSHAFT-COMP,INTAKE (Ref # 49118)	49118-0913	1
CAMSHAFT-COMP,EXHAUST (Ref # 49118A)	49118-0914	1
RING-O,18.8X1.9 (Ref # 92055)	92055-086	1
CHAIN,CAM,92RH2015 126M (Ref # 92057)	92057-0602	1
BOLT,SOCKET,6X10 (Ref # 92151)	92151-1829	4
BOLT,FLANGED-SMALL,6X25 (Ref # 92154)	92154-0117	2
BOLT,SOCKET,8X29.2 (Ref # 92154A)	92154-0953	1
BOLT,FLANGED,6X14 (Ref # 92154B)	92154-2907	1
WASHER,9X18X1 (Ref # 92200)	92200-1954	1

© 2026 Kawasaki Motors Corp., U.S.A.