2021 NINJA® 400

PARTS DIAGRAM

Seat

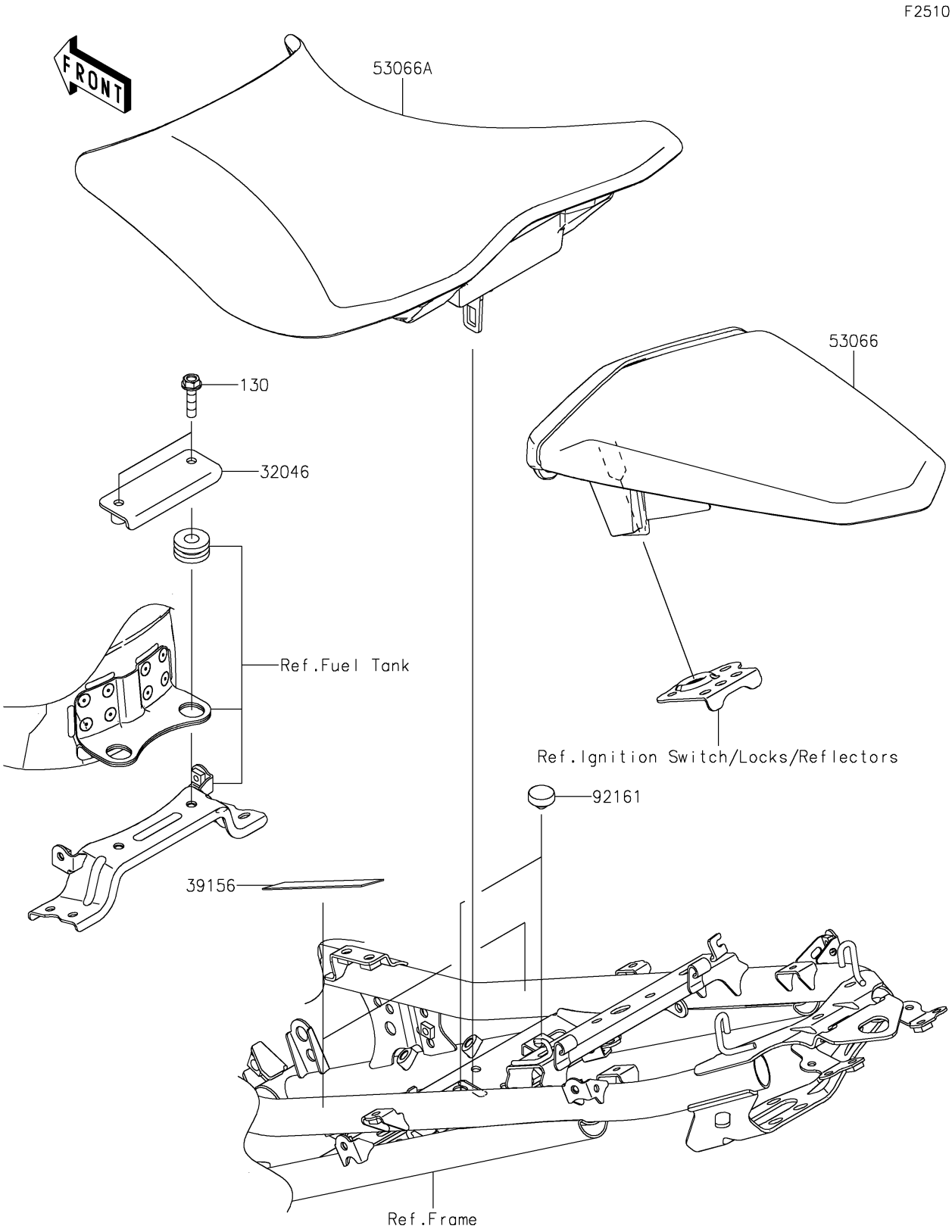

© 2026 Kawasaki Motors Corp., U.S.A.

2021 NINJA® 400

PARTS LIST

Seat

ITEM NAME	PART NUMBER	QUANTITY
BRACKET-SEAT (Ref # 32046)	32046-0423	1
PAD,35X75X1 (Ref # 39156)	39156-2383	2
SEAT-ASSY,RR,BLACK+BLK (Ref # 53066)	53066-0613-12Y	1
SEAT-ASSY,FR,BLACK (Ref # 53066A)	53066-0619-MA	1
DAMPER,9.5X18X6 (Ref # 92161)	92161-1473	2
BOLT-FLANGED,6X25 (Ref # 130)	130CC0625	2

© 2026 Kawasaki Motors Corp., U.S.A.