2012 KLX®250S PARTS DIAGRAM

Labels

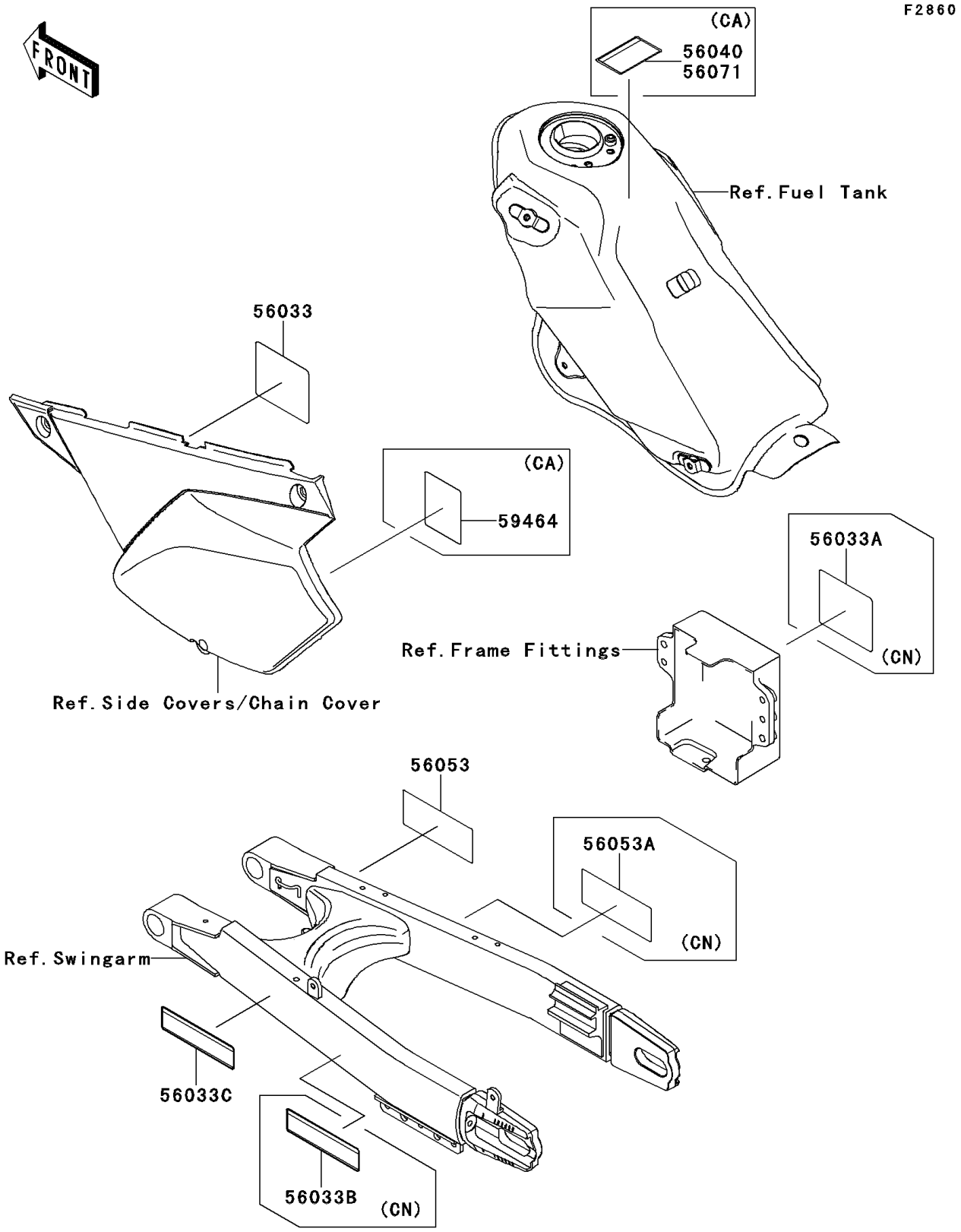

© 2026 Kawasaki Motors Corp., U.S.A.

2012 KLX®250S PARTS LIST

Labels

ITEM NAME	PART NUMBER	QUANTITY
LABEL-MANUAL,DAILY SAFETY (Ref # 56033)	56033-0210	1
LABEL-MANUAL,CHAIN (Ref # 56033C)	56033-0248	1
LABEL-SPECIFICATION,TIRE&LOAD (Ref # 56053)	56053-0298	1
LABEL-MANUAL,DAILY SAFETY (Ref # 56033A)	56033-0211	1
LABEL-MANUAL,CHAIN (Ref # 56033B)	56033-0247	1
LABEL-SPECIFICATION,TIRE&LOAD (Ref # 56053A)	56053-0299	1
LABEL-WARNING,EVAPO (Ref # 56071)	56071-0158	1
LABEL-CERTIFICATION,EVAPO ROUT (Ref # 59464)	59464-0996	1

© 2026 Kawasaki Motors Corp., U.S.A.