1999 Voyager XII PARTS DIAGRAM

Meter(s)

F2530

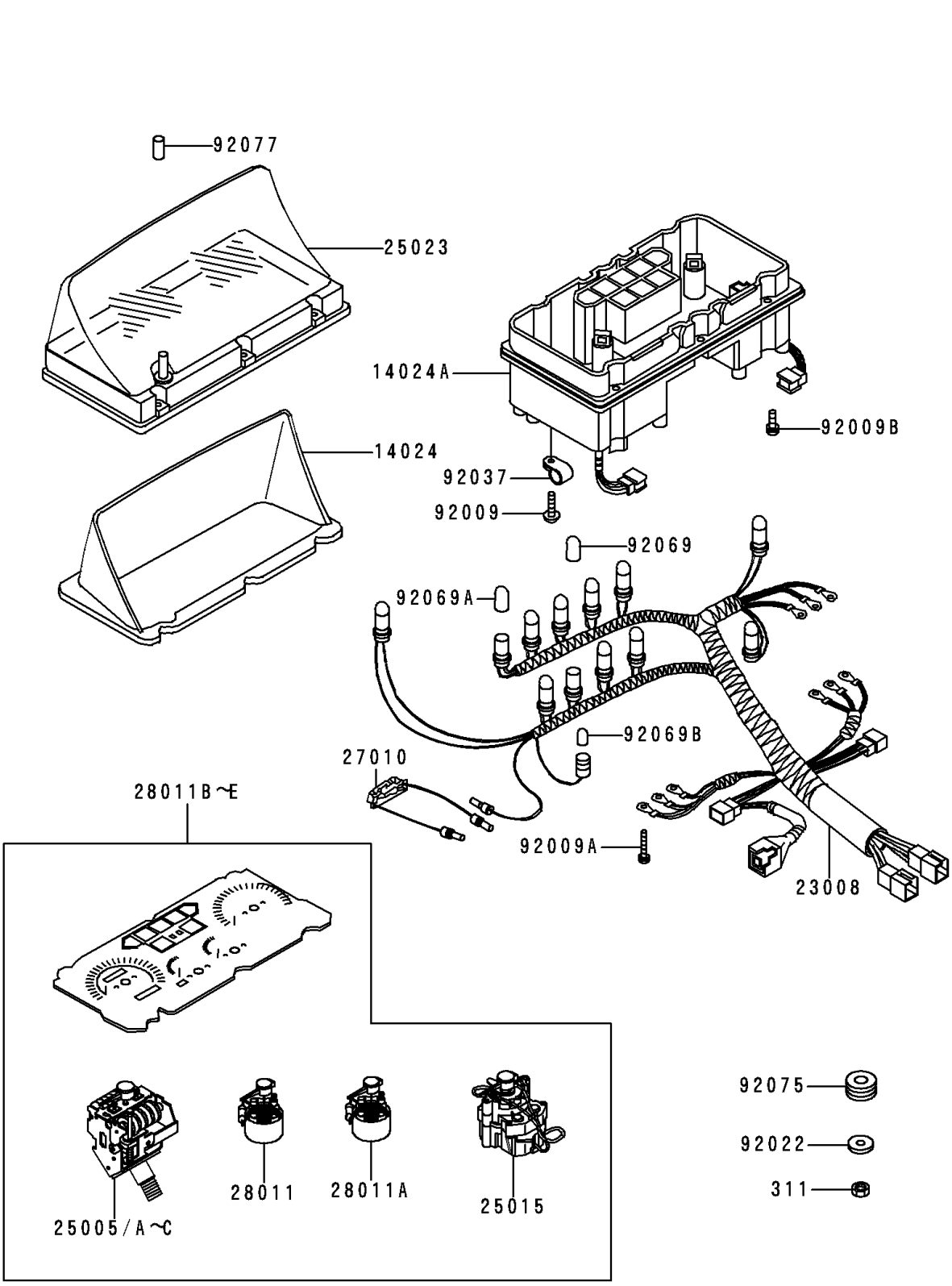

© 2026 Kawasaki Motors Corp., U.S.A.

1999 Voyager XII PARTS LIST

Meter(s)

ITEM NAME	PART NUMBER	QUANTITY
NUT-HEX (Ref # 311)	311B0500	4
COVER,METER,UPP (Ref # 14024)	14024-1179	1
COVER,METER,LWR (Ref # 14024A)	14024-1180	1
SOCKET-ASSY,METER (Ref # 23008)	23008-1344	1
TACHOMETER,X1000R/MIN (Ref # 25015)	25015-1255	1
COVER-METER CASE,UPP (Ref # 25023)	25023-1133	1
SWITCH,METER (Ref # 27010)	27010-1231	1
METER,FUEL (Ref # 28011)	28011-1079	1
METER,TEMP (Ref # 28011A)	28011-1082	1
SCREW,TAPPING,4X16 (Ref # 92009)	92009-1163	1
SCREW,3X22 (Ref # 92009A)	92009-1293	6
SCREW,3X10 (Ref # 92009B)	92009-1382	6
WASHER,5.2X16X1.2 (Ref # 92022)	92022-263	4
CLAMP,CODE (Ref # 92037)	92037-1769	1
BULB,12V 3.4W (Ref # 92069)	92069-1007	11
BULB,12V3W T-7 (Ref # 92069A)	92069-1020	1
BULB,12V 1.7W (Ref # 92069B)	92069-1059	1
DAMPER (Ref # 92075)	92075-1805	4
KNOB,RESET TRIP (Ref # 92077)	92077-1017	1
SPEEDOMETER,MPH (Ref # 25005B)	25005-1638	1
SPEEDOMETER,KPH (Ref # 25005C)	25005-1639	1
METER,FACE PLATE(MPH) (Ref # 28011D)	28011-1171	1
METER,FACE PLATE(KPH) (Ref # 28011E)	28011-1172	1

© 2026 Kawasaki Motors Corp., U.S.A.