2022 JET SKI® ULTRA® 310X PARTS DIAGRAM

Hull Rear Fittings

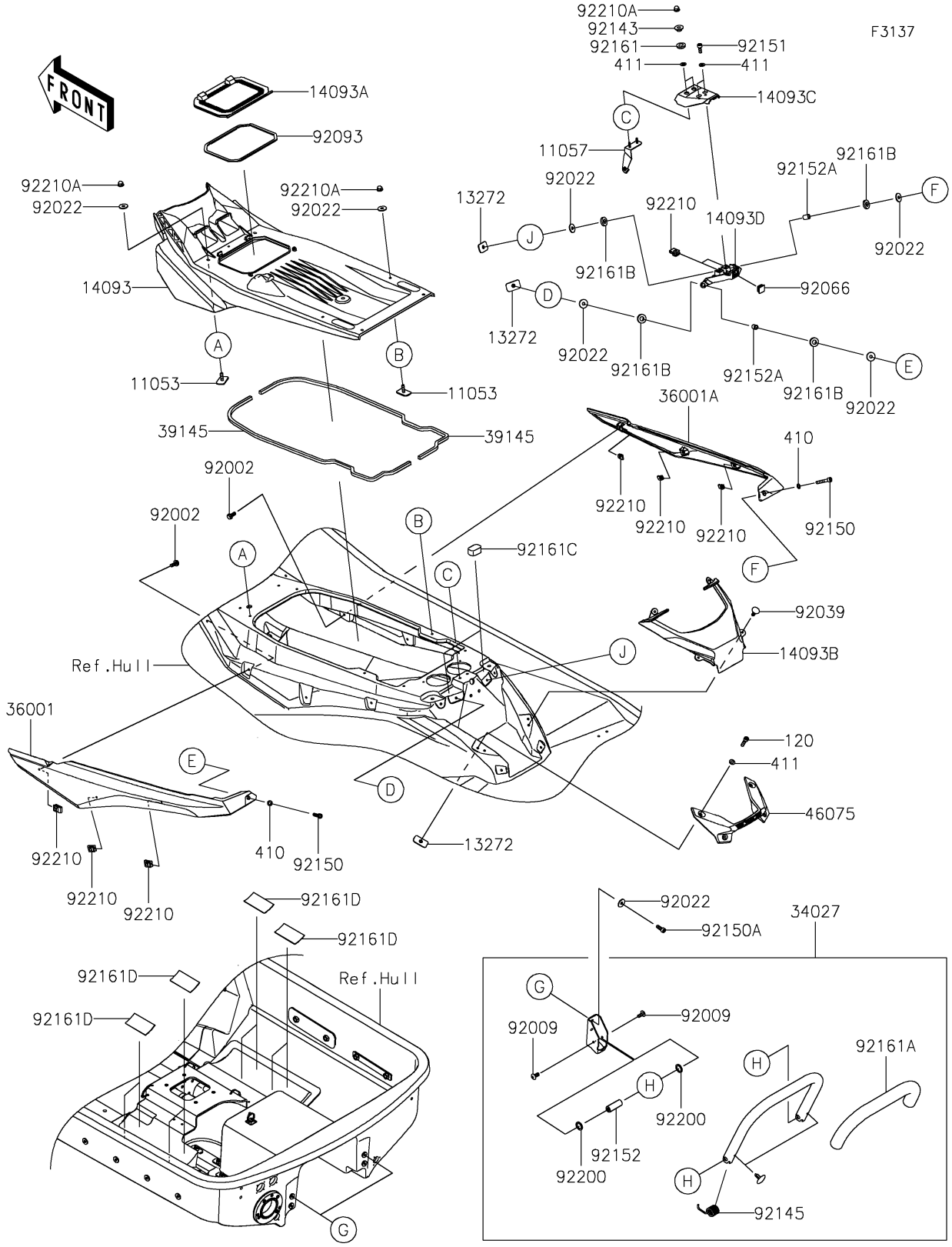

© 2026 Kawasaki Motors Corp., U.S.A.

2022 JET SKI® ULTRA® 310X PARTS LIST

Hull Rear Fittings

ITEM NAME	PART NUMBER	QUANTITY
BRACKET (Ref # 11053)	11053-3776	6
BRACKET (Ref # 11057)	11057-7387	1
PLATE (Ref # 13272)	13272-3861	6
COVER,SEAT UNDER (Ref # 14093)	14093-1171	1
COVER,MAINTENANCE NOTE (Ref # 14093A)	14093-1172	1
COVER,RR STORAGE (Ref # 14093B)	14093-1173	1
COVER,RR CAMERA,UPP (Ref # 14093C)	14093-1174	1
COVER,RR CAMERA,LWR (Ref # 14093D)	14093-1175	1
STEP-ASSY (Ref # 34027)	34027-0015	1
COVER-SIDE,RR,LH,N.YELLOW (Ref # 36001)	36001-0716-66V	1
COVER-SIDE,RR,RH,N.YELLOW (Ref # 36001A)	36001-0717-66V	1
TRIM-SEAL,10X10X1085 (Ref # 39145)	39145-0738	2
GRIP,RR DECK (Ref # 46075)	46075-0657	1
BOLT,6X16 (Ref # 92002)	92002-3728	6
SCREW,6X15 (Ref # 92009)	92009-3830	4
WASHER,6.5X20X1.5 (Ref # 92022)	92022-3710	14
RIVET (Ref # 92039)	92039-3788	4
PLUG (Ref # 92066)	92066-0994	1
SEAL (Ref # 92093)	92093-0761	1
COLLAR (Ref # 92143)	92143-3749	2
SPRING (Ref # 92145)	92145-0896	2
BOLT,SOCKET,6X35 (Ref # 92150)	92150-1887	2
BOLT,SOCKET,6X18 (Ref # 92150A)	92150-3775	4
BOLT,SOCKET,6X16 (Ref # 92151)	92151-3770	2
COLLAR (Ref # 92152)	92152-1593	2
COLLAR (Ref # 92152A)	92152-2900	2
DAMPER (Ref # 92161)	92161-0117	2
DAMPER (Ref # 92161A)	92161-1427	1
DAMPER,10X20X4 (Ref # 92161B)	92161-2458	4

© 2026 Kawasaki Motors Corp., U.S.A.

2022 JET SKI® ULTRA® 310X PARTS LIST

Hull Rear Fittings

ITEM NAME	PART NUMBER	QUANTITY
DAMPER,30X45X20 (Ref # 92161C)	92161-2467	2
DAMPER (Ref # 92161D)	92161-3728	8
WASHER,14.5X20X1.5 (Ref # 92200)	92200-3793	4
NUT,6MM (Ref # 92210)	92210-3768	8
NUT,CAP,6MM (Ref # 92210A)	92210-3785	8
BOLT-SOCKET,6X25 (Ref # 120)	120R0625	4
WASHER-PLAIN-SMALL,6MM (Ref # 410)	410S0600	2
WASHER-PLAIN,6MM (Ref # 411)	411S0600	8

© 2026 Kawasaki Motors Corp., U.S.A.