2023 JET SKI® ULTRA® 310LX

Kawasaki
Let the Good Times Roll®

PARTS DIAGRAM

Hull Rear Fittings

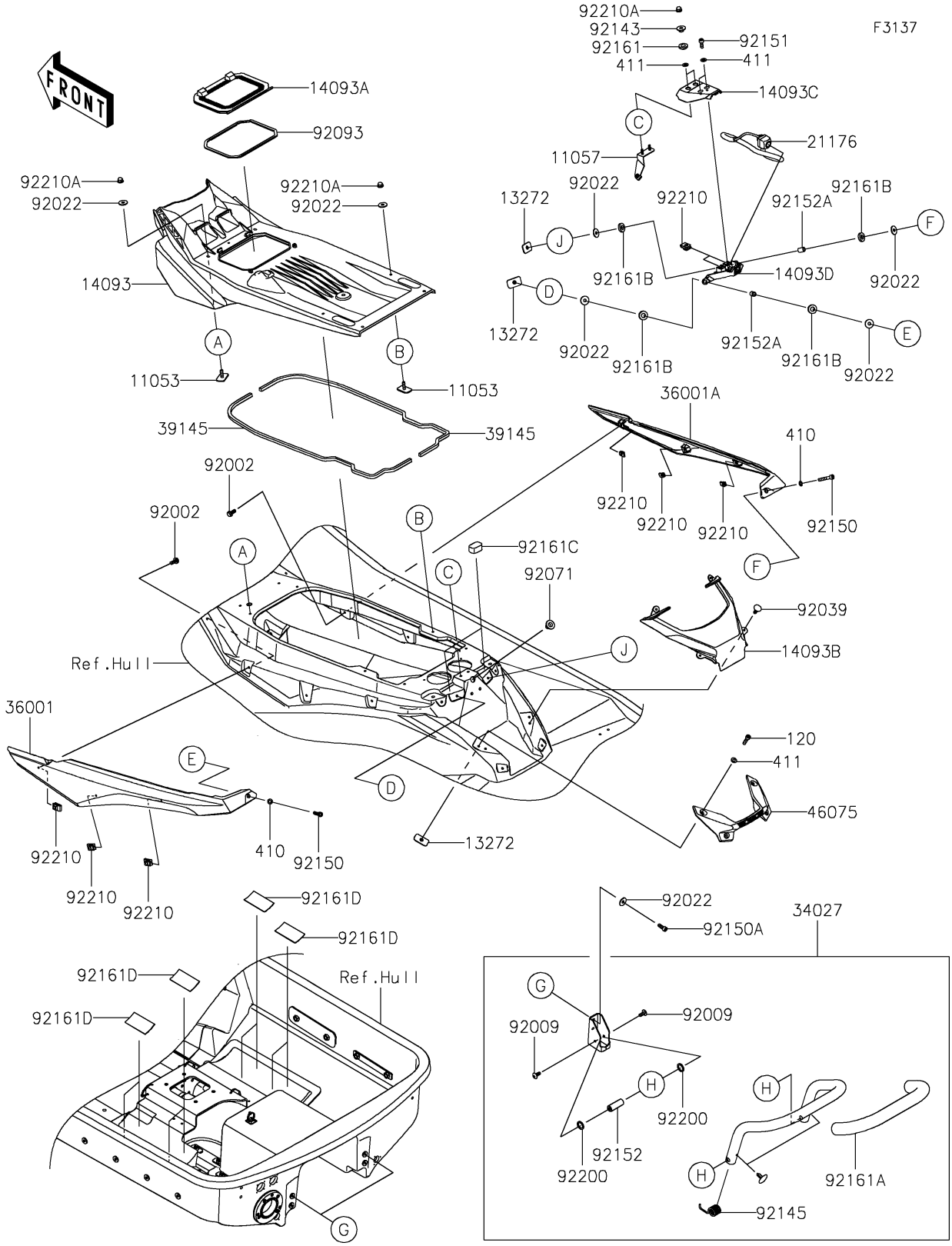

© 2026 Kawasaki Motors Corp., U.S.A.

2023 JET SKI® ULTRA® 310LX

PARTS LIST

Hull Rear Fittings

ITEM NAME	PART NUMBER	QUANTITY

© 2026 Kawasaki Motors Corp., U.S.A.