1990 Concours PARTS DIAGRAM

Rear Brake

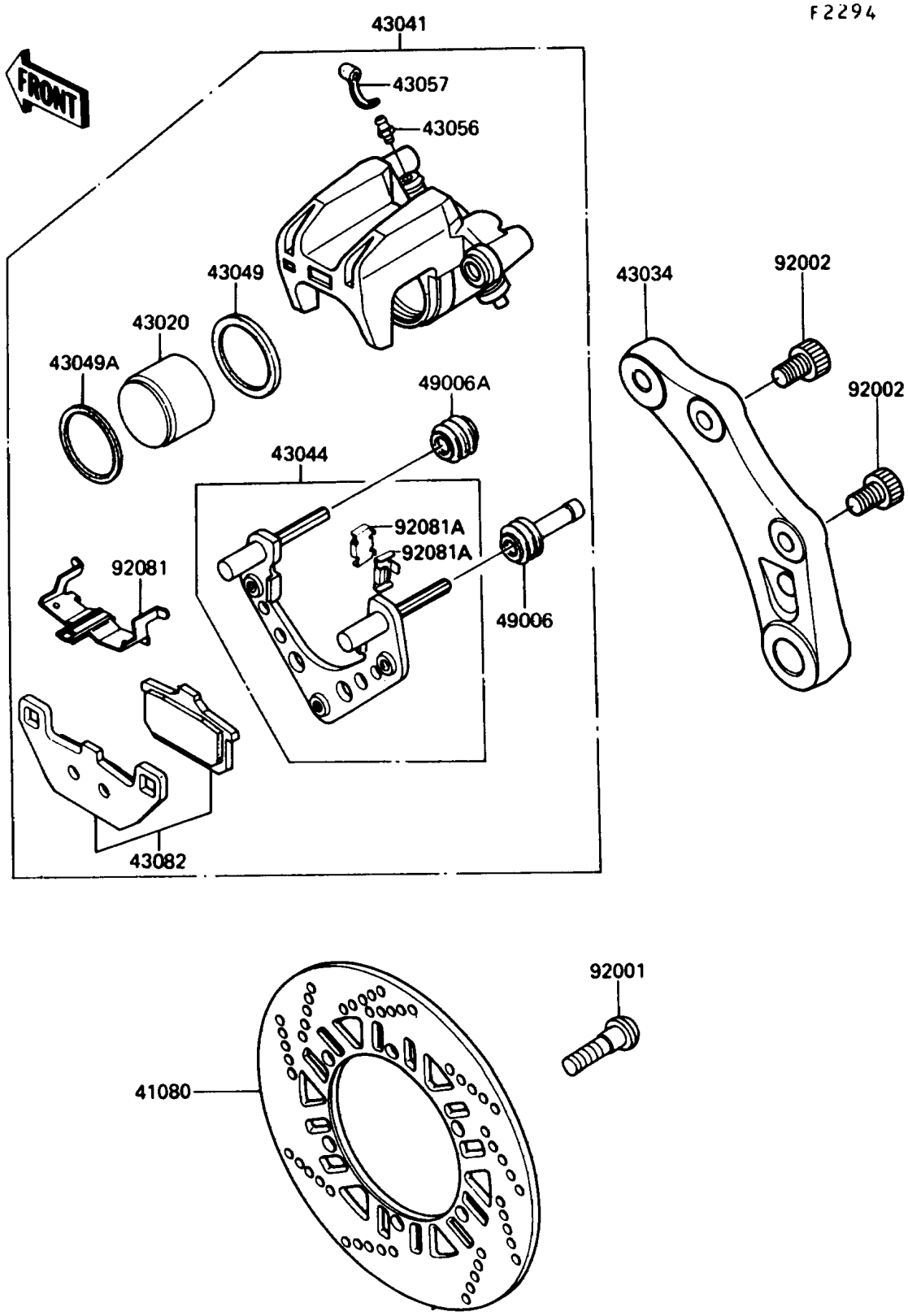

© 2024 Kawasaki Motors Corp., U.S.A.

1990 Concours PARTS LIST

Rear Brake

ITEM NAME	PART NUMBER	QUANTITY
DISC,RR (Ref # 41080)	41080-1170	1
PISTON-COMP-BRAKE (Ref # 43020)	43020-1066	1
HOLDER-BRAKE,RR CALIPER (Ref # 43034)	43034-1069	1
CALIPER-ASSY,RR (Ref # 43041)	43041-1318	1
HOLDER-COMP-CALIPER,FR,RH (Ref # 43044)	43044-1036	1
RING,PISTON SEAL (Ref # 43049)	43049-002	1
PACKING,PISTON (Ref # 43049A)	43049-1028	1
BREATHER-BRAKE (Ref # 43056)	43056-1054	1
CAP-BREATHER (Ref # 43057)	43057-003	1
PAD-ASSY-BRAKE (Ref # 43082)	43082-1062	1
BOOT,CALIPER (Ref # 49006)	49006-1094	1
BOOT,CALIPER (Ref # 49006A)	49006-1095	1
BOLT,DISC PLATE,8X30 (Ref # 92001)	92001-1951	6
BOLT,SOCKET,10X17 (Ref # 92002)	92002-1713	2
SPRING,PAD (Ref # 92081)	92081-1525	1
SPRING,PAD STOPPER (Ref # 92081A)	92081-1661	2

© 2024 Kawasaki Motors Corp., U.S.A.