1990 Concours PARTS DIAGRAM

Drive Shaft/Final Gear

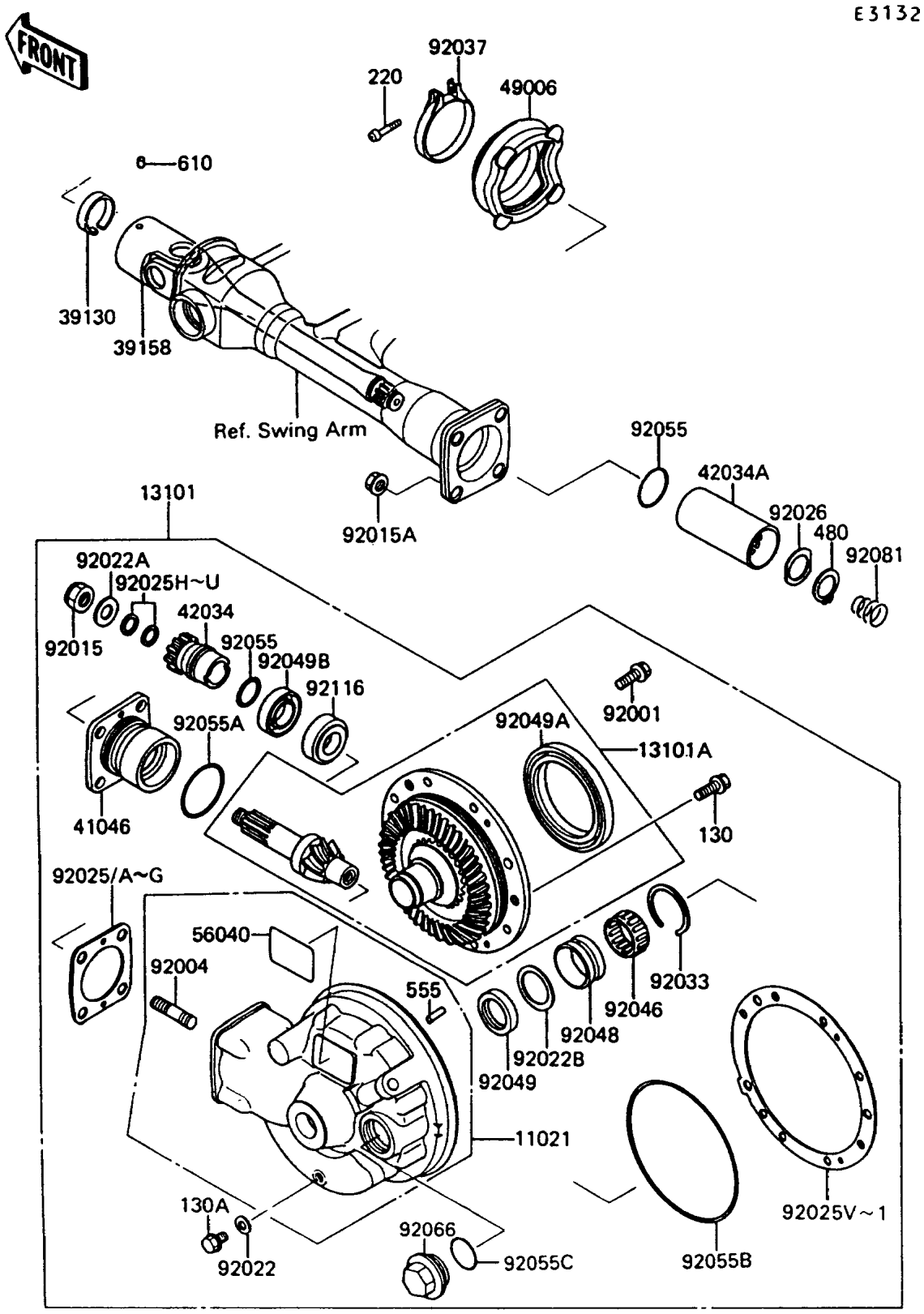

© 2026 Kawasaki Motors Corp., U.S.A.

1990 Concours PARTS LIST

Drive Shaft/Final Gear

ITEM NAME	PART NUMBER	QUANTITY
CASE-ASSY,FINAL GEAR,M.SILVER (Ref # 11021)	11021-1063-7J	1
GEAR-ASSY,FINAL,M.SILVER (Ref # 13101)	13101-1099-7J	1
GEAR-ASSY,FINAL BEVEL (Ref # 13101A)	13101-5063	1
SPRING-LEAF (Ref # 39130)	39130-1002	1
SHAFT-ASSY-DRIVE (Ref # 39158)	39158-1059	1
HOUSING-BEARING,BLACK (Ref # 41046)	41046-1069	1
COUPLING (Ref # 42034)	42034-1079	1
COUPLING,PROPELLER SHAFT,OUTER (Ref # 42034A)	42034-1092	1
BOOT (Ref # 49006)	49006-1188	1
LABEL-WARNING,OIL (Ref # 56040)	56040-1047	1
BOLT,FLANGED,10X23 (Ref # 92001)	92001-1778	1
STUD,10X30,BLACK (Ref # 92004)	92004-1045	4
NUT,16MM (Ref # 92015)	92015-1059	1
NUT,FLANGED,10MM (Ref # 92015A)	92015-1180	4
WASHER,8.2X16X1 (Ref # 92022)	92022-1086	1
WASHER,16X32X3.2 (Ref # 92022A)	92022-1105	1
WASHER,39X49.5X1 (Ref # 92022B)	92022-1294	1
SHIM,T=0.15 (Ref # 92025)	92025-1052	AR
SHIM,T=0.50 (Ref # 92025A)	92025-1053	AR
SHIM,T=0.60 (Ref # 92025B)	92025-1054	AR
SHIM,T=0.70 (Ref # 92025C)	92025-1055	AR
SHIM,T=0.80 (Ref # 92025D)	92025-1056	AR
SHIM,T=0.90 (Ref # 92025E)	92025-1057	AR
SHIM,T=1.00 (Ref # 92025F)	92025-1058	AR
SHIM,T=1.20 (Ref # 92025G)	92025-1059	AR
SHIM,T=1.30 (Ref # 92025H)	92025-1214	AR
SHIM,T=1.32 (Ref # 92025I)	92025-1215	AR
SHIM,T=1.34 (Ref # 92025J)	92025-1216	AR
SHIM,T=1.36 (Ref # 92025K)	92025-1217	AR

© 2026 Kawasaki Motors Corp., U.S.A.

1990 Concours PARTS LIST

Drive Shaft/Final Gear

ITEM NAME	PART NUMBER	QUANTITY
SHIM,T=1.38 (Ref # 92025L)	92025-1218	AR
SHIM,T=0.10 (Ref # 92025M)	92025-1219	AR
SHIM,T=0.20 (Ref # 92025N)	92025-1220	AR
SHIM,T=0.30 (Ref # 92025O)	92025-1221	AR
SHIM,T=0.50 (Ref # 92025P)	92025-1222	AR
SHIM,T=0.60 (Ref # 92025Q)	92025-1223	AR
SHIM,T=0.70 (Ref # 92025R)	92025-1224	AR
SHIM,T=0.80 (Ref # 92025S)	92025-1225	AR
SHIM,T=0.90 (Ref # 92025T)	92025-1226	AR
SHIM,T=1.00 (Ref # 92025U)	92025-1227	AR
SHIM,T=0.10 (Ref # 92025V)	92025-1625	AR
SHIM,T=0.15 (Ref # 92025W)	92025-1626	AR
SHIM,T=0.20 (Ref # 92025X)	92025-1627	AR
SHIM,T=0.30 (Ref # 92025Y)	92025-1628	AR
SHIM,T=0.60 (Ref # 92025Z)	92025-1629	AR
SHIM,T=0.90 (Ref # 920250)	92025-1630	AR
SHIM,T=1.20 (Ref # 920251)	92025-1631	AR
SPACER,PROPELLER SHAFT (Ref # 92026)	92026-1085	1
RING-SNAP,52MM (Ref # 92033)	92033-1074	1
CLAMP,BOOT FITTING (Ref # 92037)	92037-1112	1
BEARING-NEEDLE,KTV384620E01 C3 (Ref # 92046)	92046-1057	1
RACE,ORT465021E01 (Ref # 92048)	92048-1019	1
SEAL-OIL,S-35477HS (Ref # 92049)	92049-1025	1
SEAL-OIL,S-901159HS (Ref # 92049A)	92049-1026	1
SEAL-OIL,SC32487 (Ref # 92049B)	92049-1033	1
RING-O,ID=32.7 (Ref # 92055)	92055-1037	2
RING-O,ID=57.6 (Ref # 92055A)	92055-1038	1
RING-O,154MM (Ref # 92055B)	92055-1165	1
RING-O,35.8MM (Ref # 92055C)	92055-1281	1

© 2026 Kawasaki Motors Corp., U.S.A.

1990 Concours PARTS LIST

Drive Shaft/Final Gear

ITEM NAME	PART NUMBER	QUANTITY
PLUG,OIL FILLER CAP,M.SILVER (Ref # 92066)	92066-1006-7J	1
SPRING,PROPELLER SHAFT (Ref # 92081)	92081-1183	1
BEARING-ROLLER,4T32005X (Ref # 92116)	92116-1004	1
BOLT-FLANGED,8X25 (Ref # 130)	130G0825	7
BOLT-FLANGED (Ref # 130A)	130X0812	1
SCREW-PAN-CROS (Ref # 220)	220B0430	1
CIRCLIP-TYPE-C,26MM (Ref # 480)	480J2600	1
PIN-SPRING (Ref # 555)	555A0428	1
ROLLER,4X6 (Ref # 610)	610A0406	1

© 2026 Kawasaki Motors Corp., U.S.A.