# 1998 Concours PARTS DIAGRAM

## Crankcase Bolt Pattern

E1412

Upper Case

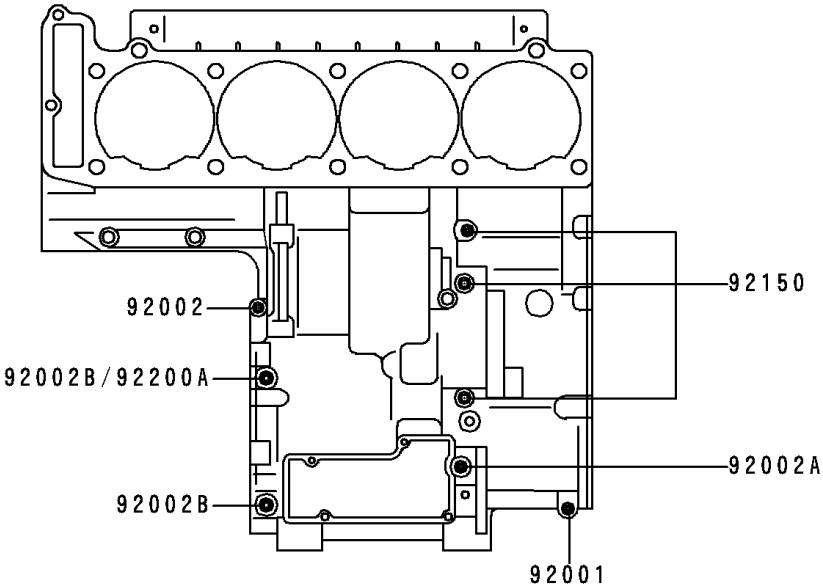


Lower Case

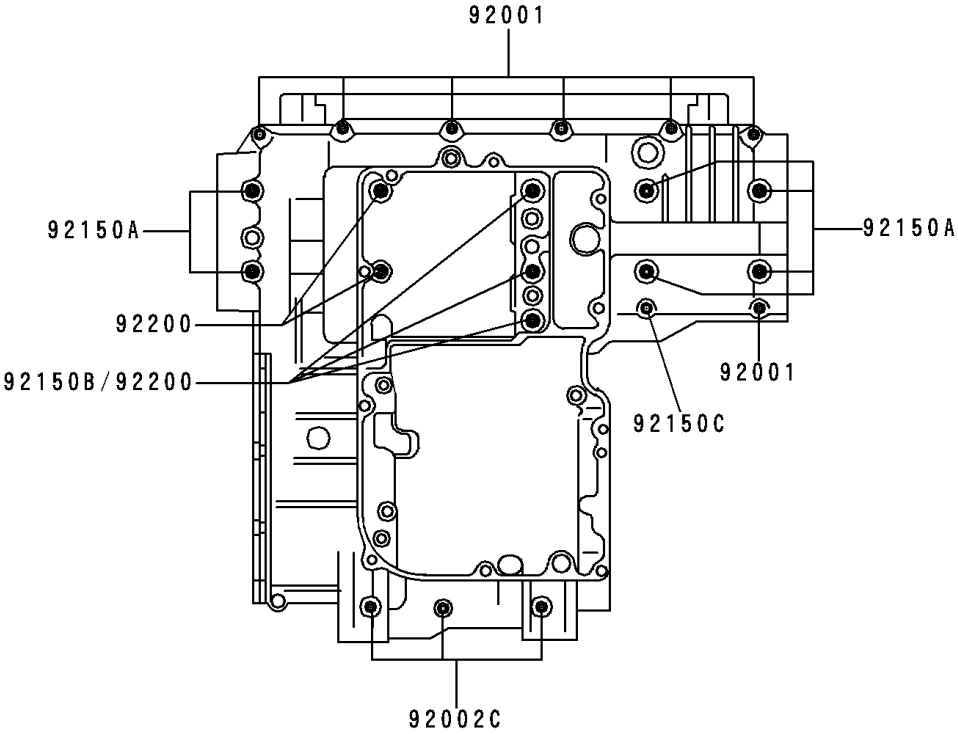


© 2024 Kawasaki Motors Corp., U.S.A.

# 1998 Concours PARTS LIST

## Crankcase Bolt Pattern

| ITEM NAME | PART NUMBER | QUANTITY |
|---|---|---|
| BOLT,6X38 (Ref # 92001) | 92001-1899 | 8 |
| BOLT,6X55 (Ref # 92002) | 92002-1054 | 1 |
| BOLT,6X85 (Ref # 92002A) | 92002-1306 | 1 |
| BOLT,8X63 (Ref # 92002B) | 92002-1308 | 2 |
| BOLT,6X120 (Ref # 92002C) | 92002-1654 | 3 |
| BOLT,6X115 (Ref # 92150) | 92150-1140 | 3 |
| BOLT,9X90 (Ref # 92150A) | 92150-1364 | 6 |
| BOLT,9X140 (Ref # 92150B) | 92150-1365 | 3 |
| BOLT,7X38 (Ref # 92150C) | 92150-1367 | 1 |
| WASHER,9.5X18X1.2 (Ref # 92200) | 92200-1037 | 5 |
| WASHER,8.5X16X1.2 (Ref # 92200A) | 92200-1063 | 1 |

© 2024 Kawasaki Motors Corp., U.S.A.