2008 Vulcan® 2000 Classic LT PARTS DIAGRAM

Brake Pedal/Torque Link

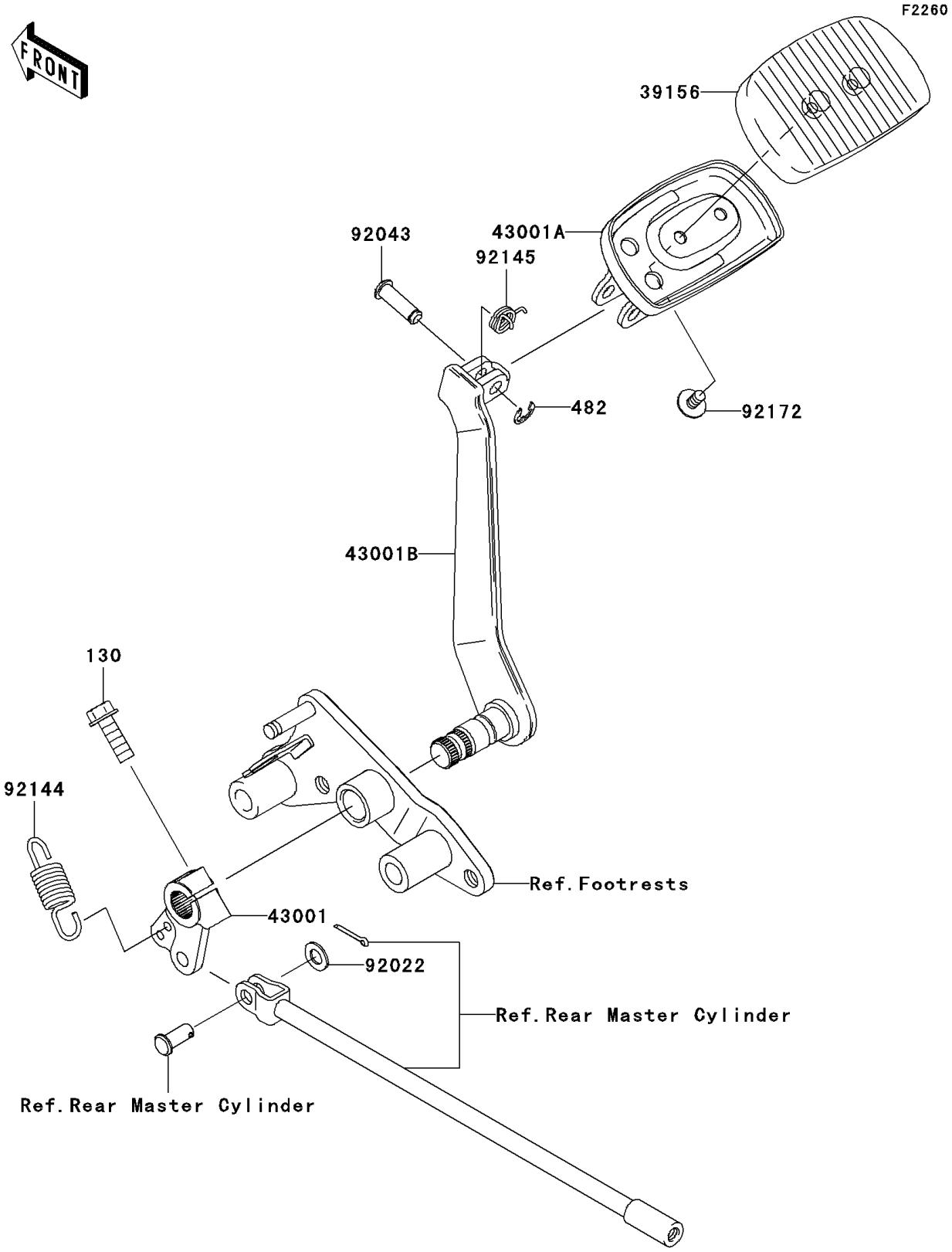

© 2024 Kawasaki Motors Corp., U.S.A.

2008 Vulcan® 2000 Classic LT PARTS LIST

Brake Pedal/Torque Link

ITEM NAME	PART NUMBER	QUANTITY
BOLT-FLANGED,8X30 (Ref # 130)	130BB0830	1
CIRCLIP-TYPE-E (Ref # 482)	482EA7000	1
PAD,BRAKE PEDAL (Ref # 39156)	39156-0045	1
LEVER-BRAKE (Ref # 43001)	43001-0022	1
LEVER-BRAKE (Ref # 43001A)	43001-0023	1
LEVER-BRAKE,PADAL (Ref # 43001B)	43001-0031	1
WASHER,8.5X16X1.2 (Ref # 92022)	92022-1582	1
PIN,8X24.5 (Ref # 92043)	92043-0047	1
SPRING,BRAKE PEDAL RETURN (Ref # 92144)	92144-1169	1
SPRING (Ref # 92145)	92145-0168	1
SCREW,6X10 (Ref # 92172)	92172-0098	2

© 2024 Kawasaki Motors Corp., U.S.A.