2000 Vulcan 800 PARTS DIAGRAM

Labels

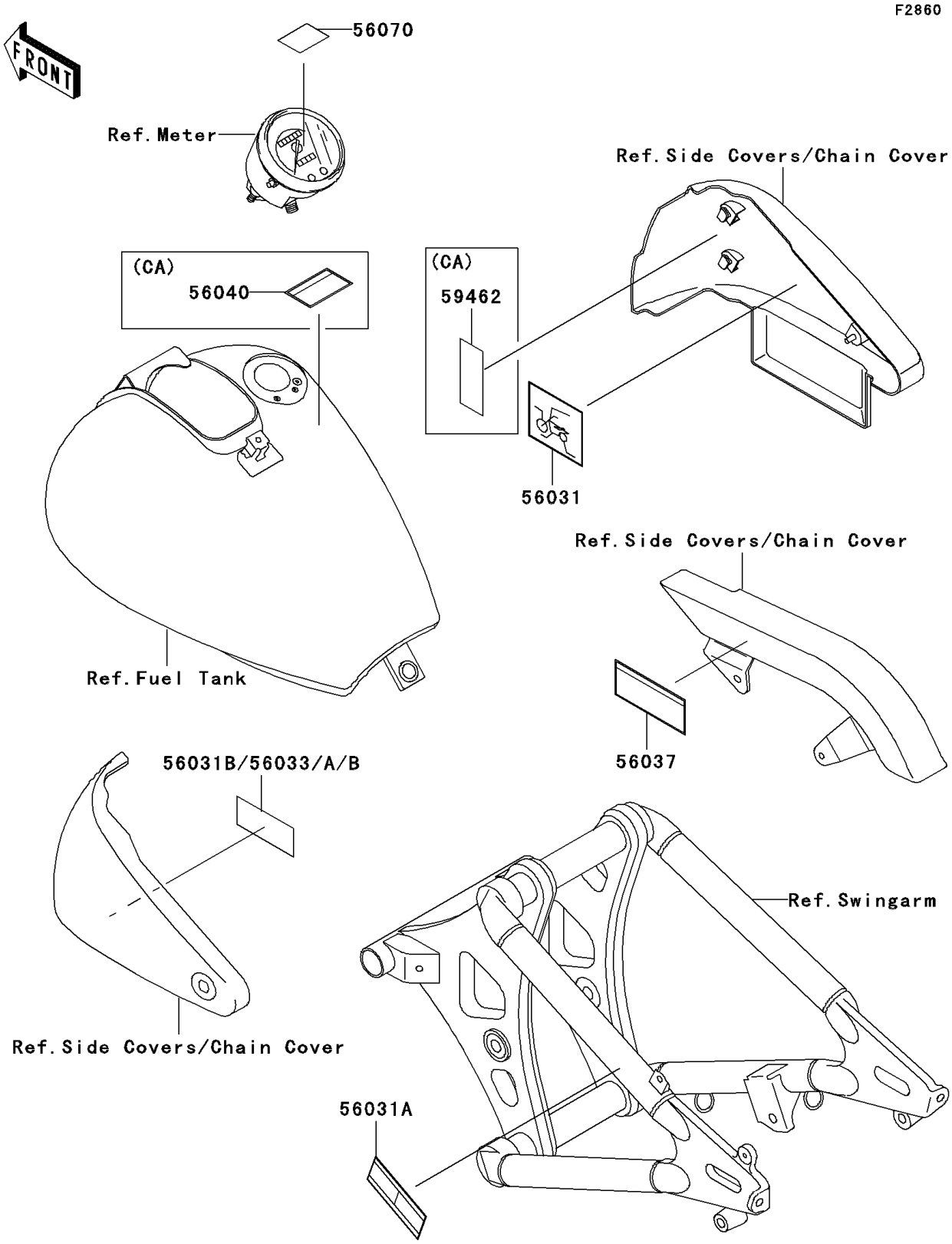

© 2024 Kawasaki Motors Corp., U.S.A.

2000 Vulcan 800 PARTS LIST

Labels

ITEM NAME	PART NUMBER	QUANTITY
LABEL-MANUAL,DAILY SAFETY (Ref # 56031)	56031-1936	1
LABEL-MANUAL,CHAIN (Ref # 56031A)	56031-1937	1
LABEL-MANUAL,OIL&OIL FILTER (Ref # 56031B)	56031-1938	1
LABEL-SPECIFICATION,TIRE&LOAD (Ref # 56037)	56037-1670	1
LABEL-WARNING,BREAK IN CAUTION (Ref # 56070)	56070-1095	1
LABEL-WARNING,EVAPO (Ref # 56040)	56040-1121	1
LABEL-CERTIFICATION,EVAPO ROUT (Ref # 59462)	59462-1755	1

© 2024 Kawasaki Motors Corp., U.S.A.