2002 Vulcan 750 PARTS DIAGRAM

Brake Pedal/Torque Link

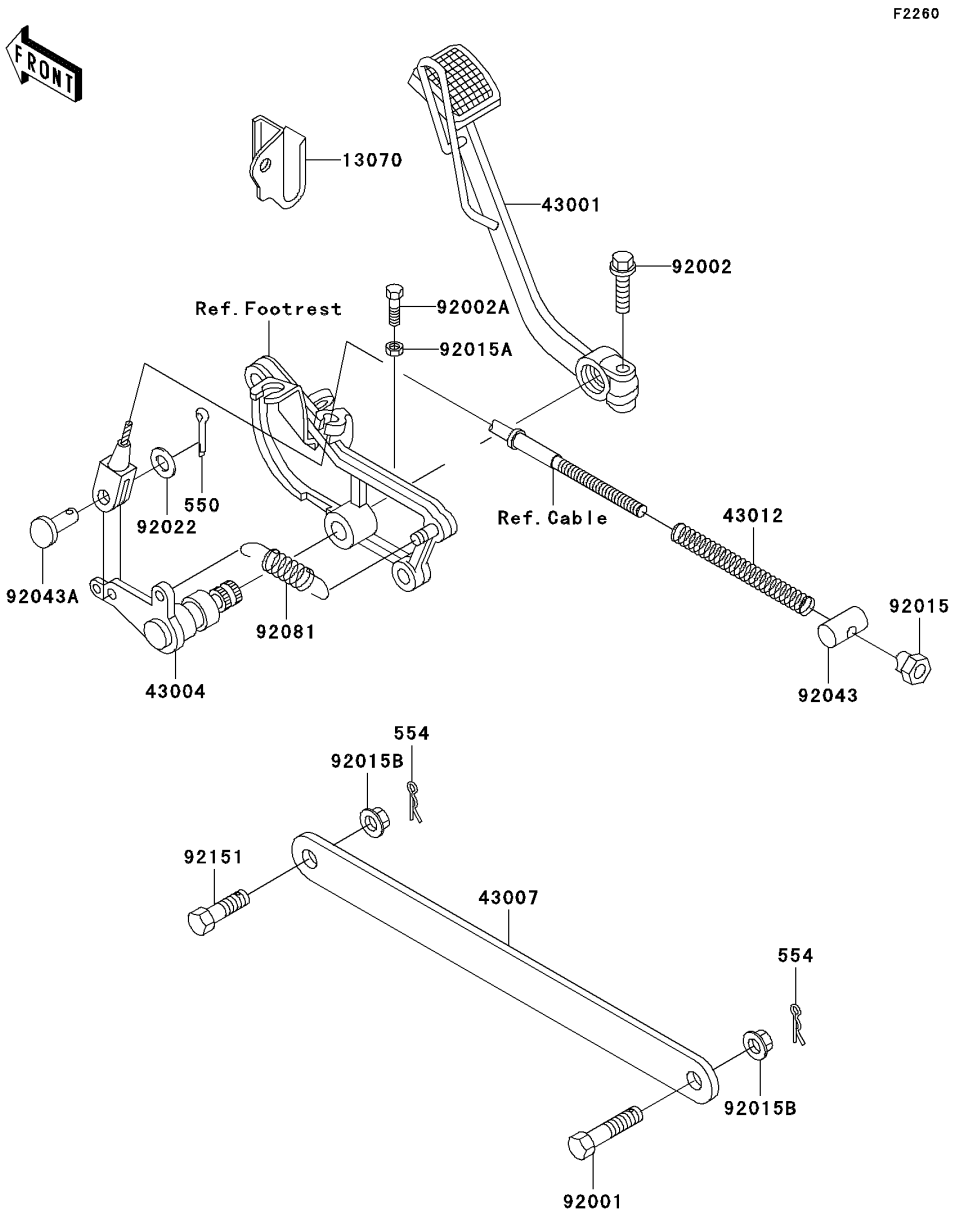

© 2024 Kawasaki Motors Corp., U.S.A.

2002 Vulcan 750 PARTS LIST

Brake Pedal/Torque Link

ITEM NAME	PART NUMBER	QUANTITY
PIN-COTTER,2.0X15 (Ref # 550)	550D2015	1
PIN-SNAP,8MM (Ref # 554)	554A0800	2
GUIDE,CABLE (Ref # 13070)	13070-1134	1
LEVER-BRAKE,PEDAL (Ref # 43001)	43001-1178	1
SHAFT-BRAKE (Ref # 43004)	43004-1109	1
ROD-TORQUE (Ref # 43007)	43007-1132	1
SPRING,BRAKE ROD (Ref # 43012)	43012-001	1
BOLT,10X37 (Ref # 92001)	92001-1519	1
BOLT,FLANGED,8X25 (Ref # 92002)	92002-1201	1
BOLT,6X20 (Ref # 92002A)	92002-1373	1
NUT,BRAKE ROD (Ref # 92015)	92015-042	1
NUT,6MM (Ref # 92015A)	92015-1391	1
NUT,FLANGED,10MM (Ref # 92015B)	92015-1428	2
WASHER,8.5X16X1.2 (Ref # 92022)	92022-1582	1
PIN,BRAKE ROD (Ref # 92043)	92043-065	1
PIN,8X16 (Ref # 92043A)	92043-1013	1
SPRING,BRAKE PEDAL (Ref # 92081)	92081-1845	1
BOLT,10X29 (Ref # 92151)	92151-1876	1

© 2024 Kawasaki Motors Corp., U.S.A.