# 2022 NINJA H2® PARTS DIAGRAM

## Radiator

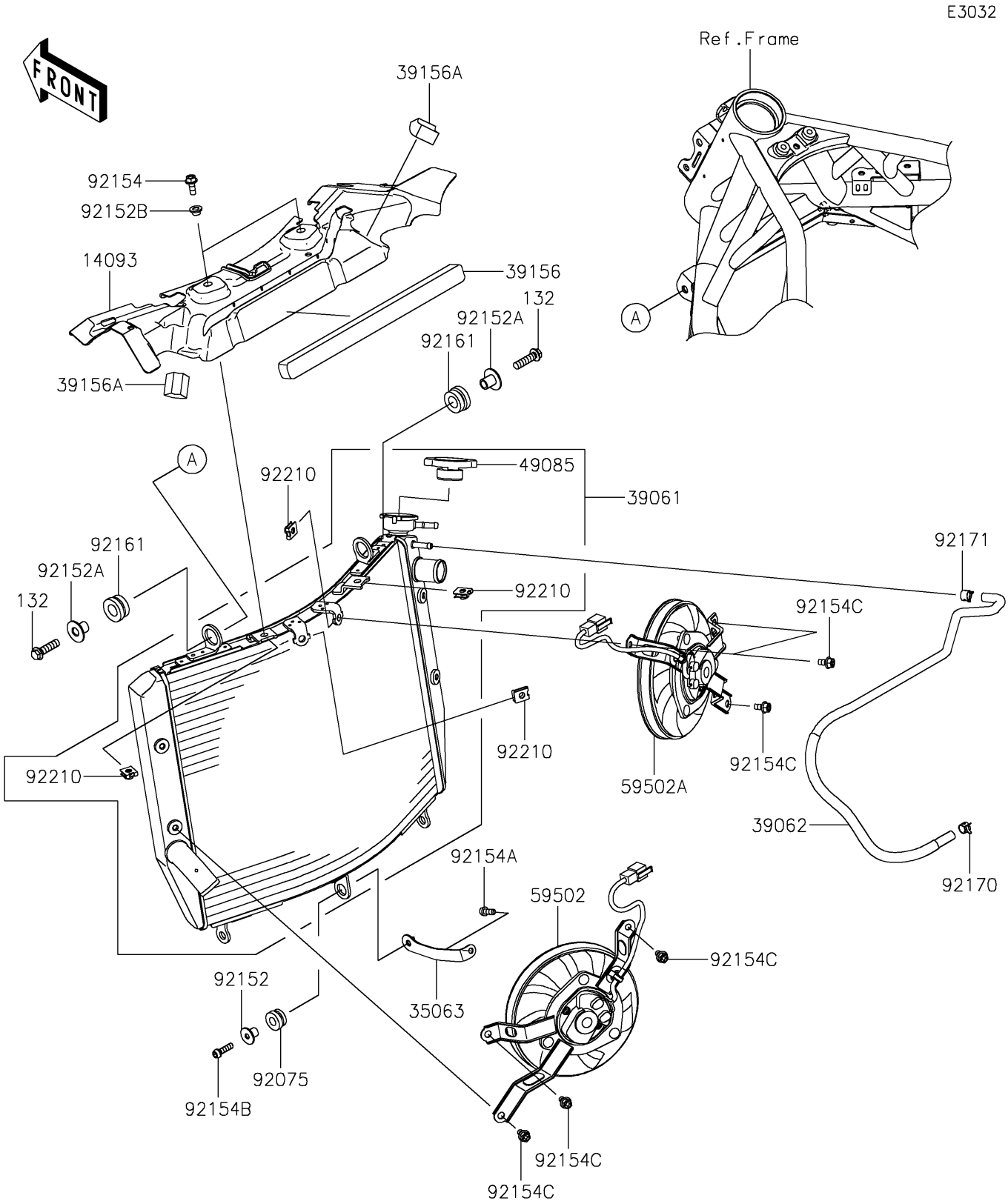


© 2025 Kawasaki Motors Corp., U.S.A.

# 2022 NINJA H2® PARTS LIST

Radiator

| ITEM NAME | PART NUMBER | QUANTITY |
|---|---|---|
| COVER,HEAT (Ref # 14093) | 14093-0158 | 1 |
| STAY,RADIATOR (Ref # 35063) | 35063-0997 | 1 |
| RADIATOR-ASSY (Ref # 39061) | 39061-0698 | 1 |
| HOSE-COOLING,AIR BLEED (Ref # 39062) | 39062-0688 | 1 |
| PAD,20X285X15 (Ref # 39156) | 39156-1840 | 1 |
| PAD,27X27X15 (Ref # 39156A) | 39156-1841 | 2 |
| CAP-ASSY-PRESSURE (Ref # 49085) | 49085-0006 | 1 |
| FAN-ASSY (Ref # 59502) | 59502-0601 | 1 |
| FAN-ASSY (Ref # 59502A) | 59502-0602 | 1 |
| DAMPER,RUBBER (Ref # 92075) | 92075-1123 | 1 |
| COLLAR,6.5X10X13.1 (Ref # 92152) | 92152-0332 | 1 |
| COLLAR (Ref # 92152A) | 92152-0439 | 2 |
| COLLAR (Ref # 92152B) | 92152-2111 | 2 |
| BOLT,FLANGED,6X16 (Ref # 92154) | 92154-0887 | 2 |
| BOLT,SOCKET,6X16 (Ref # 92154A) | 92154-1454 | 1 |
| BOLT,SOCKET,6X22 (Ref # 92154B) | 92154-1456 | 1 |
| BOLT (Ref # 92154C) | 92154-1648 | 6 |
| DAMPER (Ref # 92161) | 92161-0304 | 2 |
| CLAMP (Ref # 92170) | 92170-1493 | 1 |
| CLAMP (Ref # 92171) | 92171-0719 | 1 |
| NUT (Ref # 92210) | 92210-1323 | 4 |
| BOLT-FLANGED-SMALL,8X30 (Ref # 132) | 132BC0830 | 2 |

© 2025 Kawasaki Motors Corp., U.S.A.