2022 NINJA H2®

PARTS DIAGRAM

Balancer

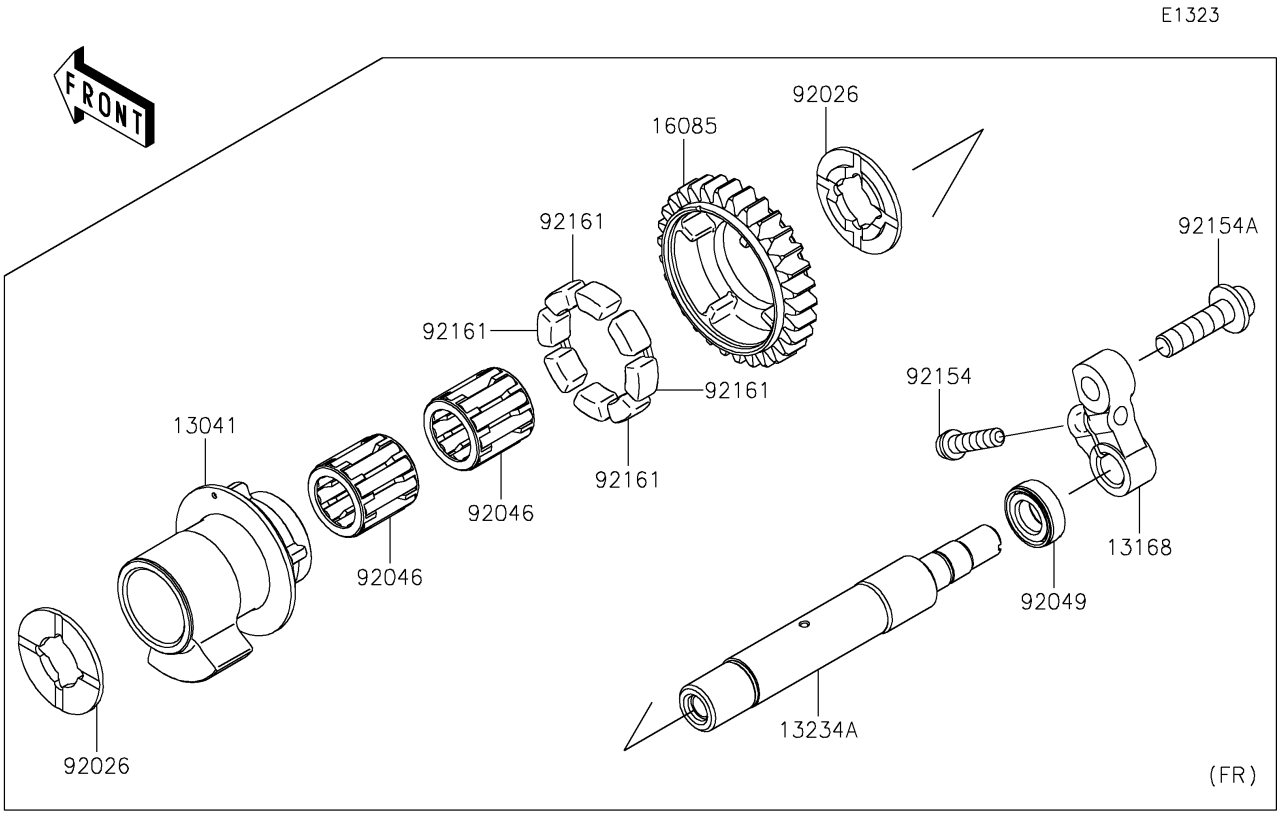

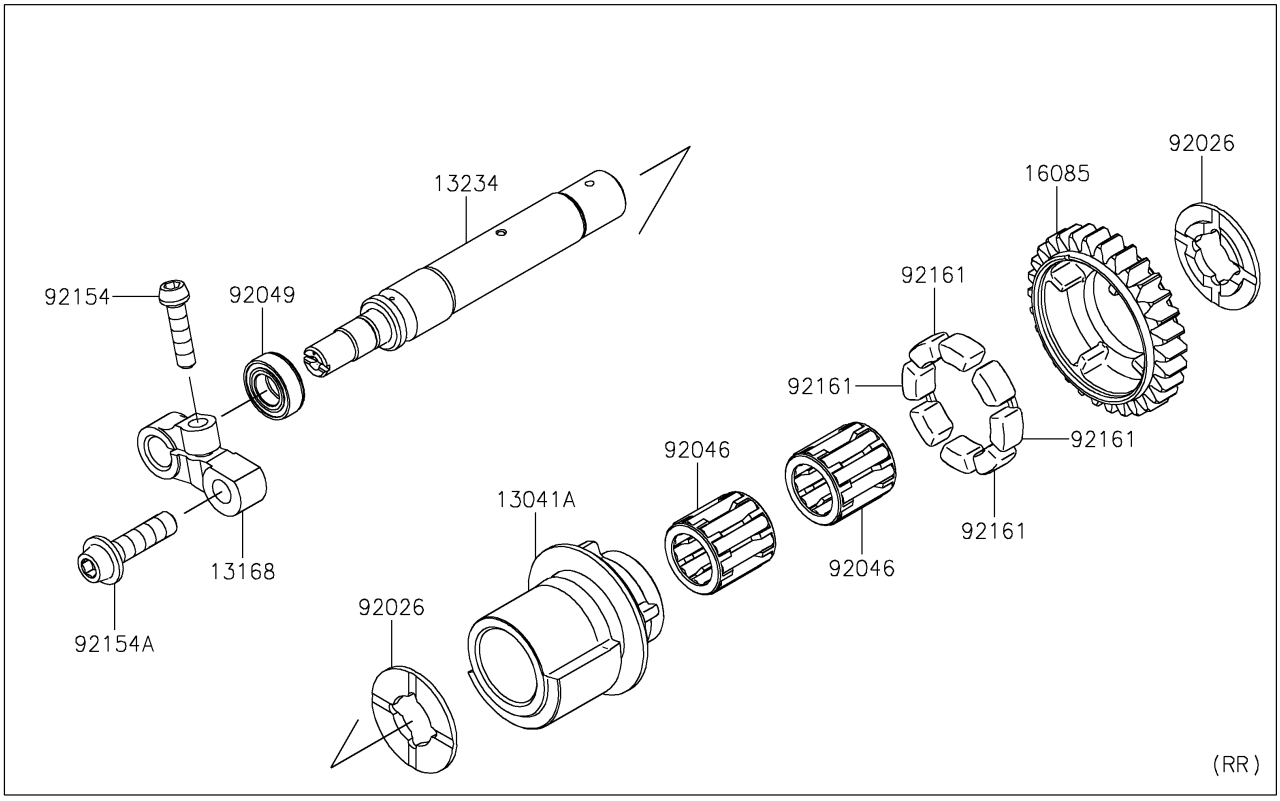

© 2026 Kawasaki Motors Corp., U.S.A.

2022 NINJA H2®

PARTS LIST

Balancer

ITEM NAME	PART NUMBER	QUANTITY
BALANCER,FR (Ref # 13041)	13041-0043	1
BALANCER,RR (Ref # 13041A)	13041-0045	1
LEVER,BACKLASH ADJUSTMENT (Ref # 13168)	13168-0831	2
SHAFT-COMP (Ref # 13234)	13234-0050	1
SHAFT-COMP (Ref # 13234A)	13234-0595	1
GEAR,30T (Ref # 16085)	16085-0621	2
SPACER (Ref # 92026)	92026-0730	4
BEARING-NEEDLE (Ref # 92046)	92046-1266	4
SEAL-OIL (Ref # 92049)	92049-0720	2
BOLT,SOCKET,6X25 (Ref # 92154)	92154-1457	2
BOLT,SOCKET,8X30 (Ref # 92154A)	92154-1679	2
DAMPER (Ref # 92161)	92161-1055	8

© 2026 Kawasaki Motors Corp., U.S.A.