2006 Vulcan 2000 PARTS DIAGRAM

Starter Solenoid

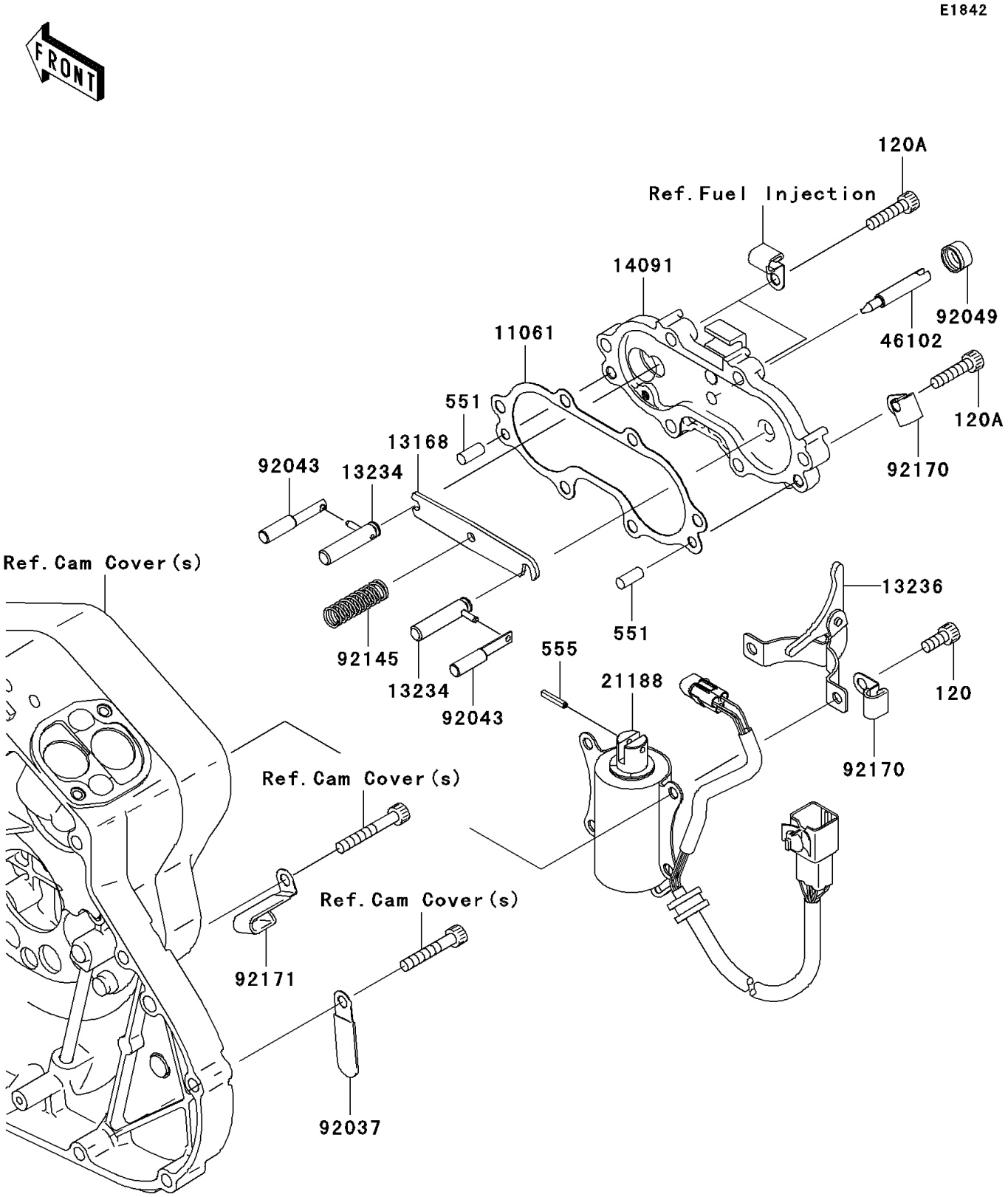

© 2024 Kawasaki Motors Corp., U.S.A.

2006 Vulcan 2000 PARTS LIST

Starter Solenoid

ITEM NAME	PART NUMBER	QUANTITY

© 2024 Kawasaki Motors Corp., U.S.A.