2020 Ninja® ZX™-6R PARTS DIAGRAM

Accessory(Axle Slider)

F2910B

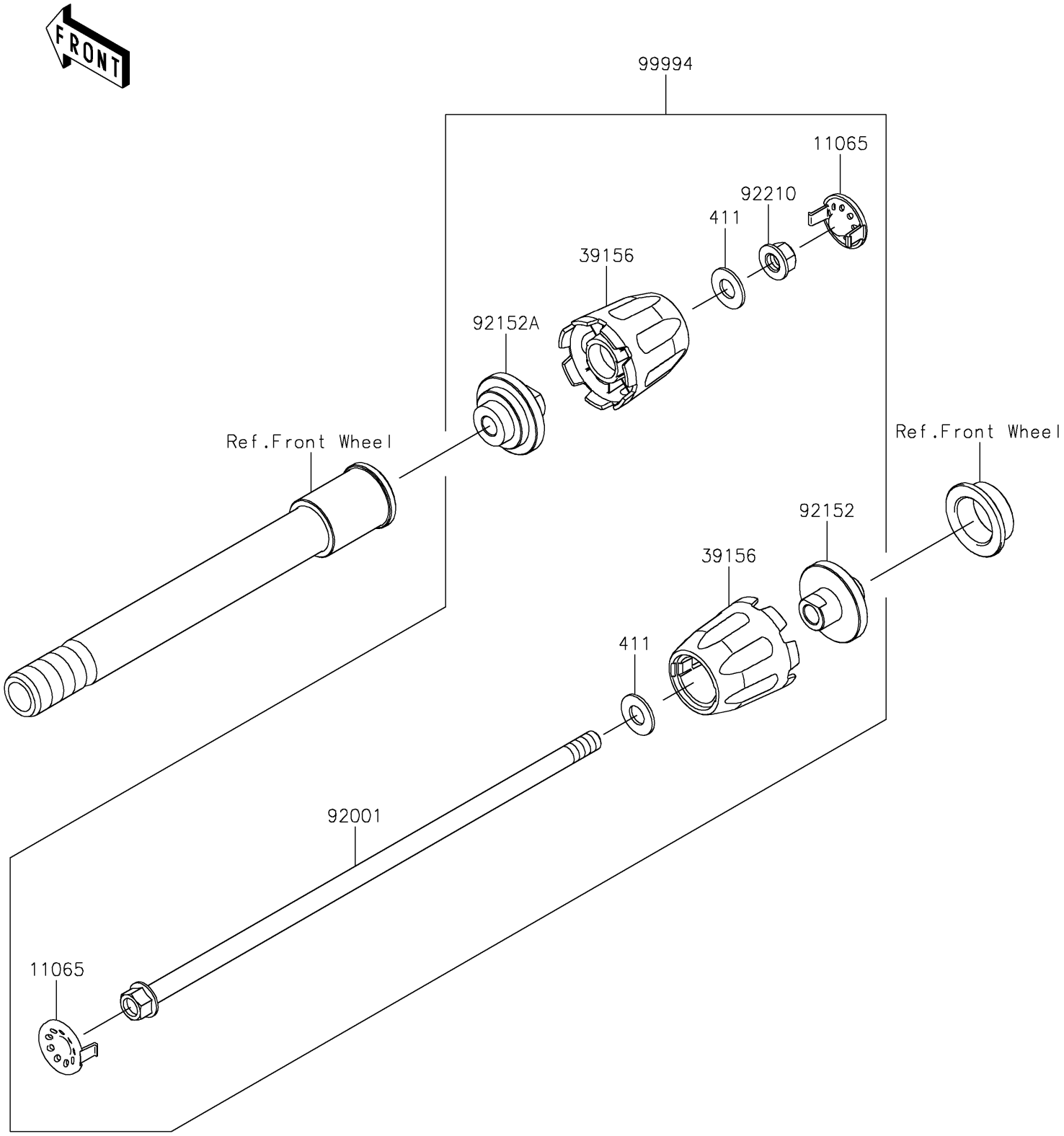

© 2025 Kawasaki Motors Corp., U.S.A.

2020 Ninja® ZX™-6R PARTS LIST

Accessory(Axle Slider)

ITEM NAME	PART NUMBER	QUANTITY
CAP,B.SILVER (Ref # 11065)	11065-1313-54N	2
PAD,AXLE SLIDER (Ref # 39156)	39156-2212	2
BOLT,FLANGED,10X320,BLACK (Ref # 92001)	92001-1624	1
COLLAR,LH (Ref # 92152)	92152-2502	1
COLLAR,RH (Ref # 92152A)	92152-2503	1
NUT,LOCK,FLANGED,10MM (Ref # 92210)	92210-1139	1
FRONT AXLE SLIDER (Ref # 99994)	99994-1119	1
WASHER-PLAIN,10MM (Ref # 411)	411AA1000	2

© 2025 Kawasaki Motors Corp., U.S.A.