2020 Ninja® ZX™-6R PARTS DIAGRAM

Chassis Electrical Equipment

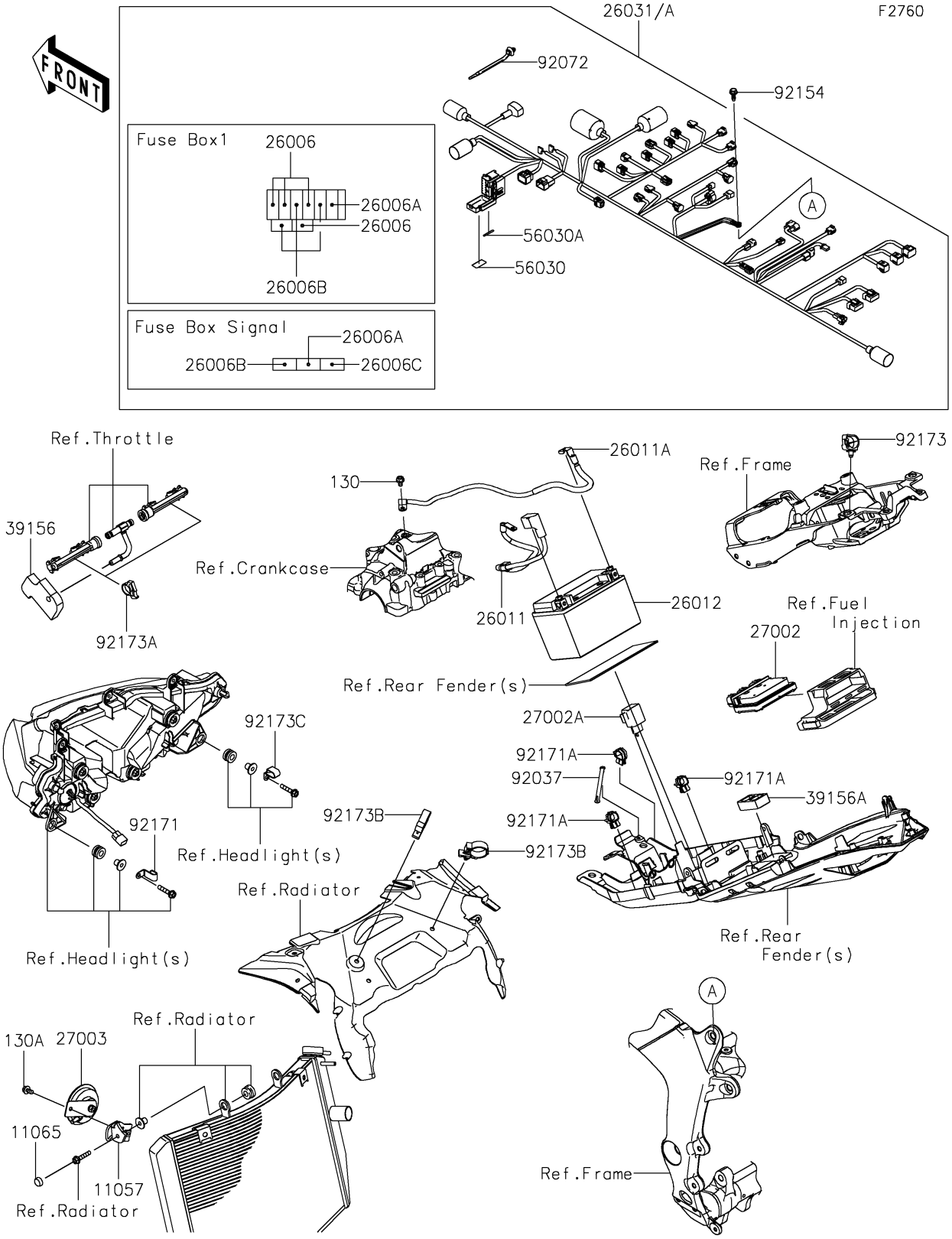

© 2025 Kawasaki Motors Corp., U.S.A.

2020 Ninja® ZX™-6R PARTS LIST

Chassis Electrical Equipment

ITEM NAME	PART NUMBER	QUANTITY
BRACKET,HORN (Ref # 11057)	11057-2410	1
CAP,BOLT (Ref # 11065)	11065-0752	1
FUSE,MINI BLADE,15A,BLUE (Ref # 26006)	26006-0001	4
FUSE,MINI BLADE,2A,GRAY (Ref # 26006A)	26006-0052	2
FUSE,MINI BLADE,7.5A,BROWN (Ref # 26006B)	26006-0055	4
FUSE,MINI BLADE,30A,GREEN (Ref # 26006C)	26006-1080	1
WIRE-LEAD,BATTERY(+) (Ref # 26011)	26011-1857	1
WIRE-LEAD,BATTERY(-) (Ref # 26011A)	26011-1859	1
BATTERY,YTX9-BS,12V 8AH (Ref # 26012)	26012-0838	1
HARNESS,MAIN (Ref # 26031)	26031-2615	1
HARNESS,MAIN (Ref # 26031A)	26031-2616	1
RELAY-ASSY (Ref # 27002)	27002-0028	1
RELAY-ASSY,SIGNAL LAMP (Ref # 27002A)	27002-1097	1
HORN (Ref # 27003)	27003-0140	1
PAD,T15 (Ref # 39156)	39156-0962	1
PAD,32X52X15 (Ref # 39156A)	39156-2146	1
LABEL,FUSE BOX1 (Ref # 56030)	56030-1417	1
LABEL,FUSE BOX SIGNAL (Ref # 56030A)	56030-1418	1
CLAMP,SPEED,L=80.5 (Ref # 92037)	92037-1903	1
BAND,OS170-FT7(BLACK) (Ref # 92072)	92072-1414	AR
BOLT,FLANGED,6X16 (Ref # 92154)	92154-0551	1
CLAMP (Ref # 92171)	92171-0926	1
CLAMP,EDGE CLIP (Ref # 92171A)	92171-1722	3
CLAMP (Ref # 92173)	92173-0861	1
CLAMP,SNAPPER (Ref # 92173A)	92173-0970	2
CLAMP,CABLE,28MM (Ref # 92173B)	92173-1062	2
CLAMP (Ref # 92173C)	92173-1891	1
BOLT-FLANGED,6X10 (Ref # 130)	130BA0610	1
BOLT-FLANGED,6X12 (Ref # 130A)	130CA0612	1

© 2025 Kawasaki Motors Corp., U.S.A.