2020 Ninja® ZX™-6R PARTS DIAGRAM

Meter(s)

F2530

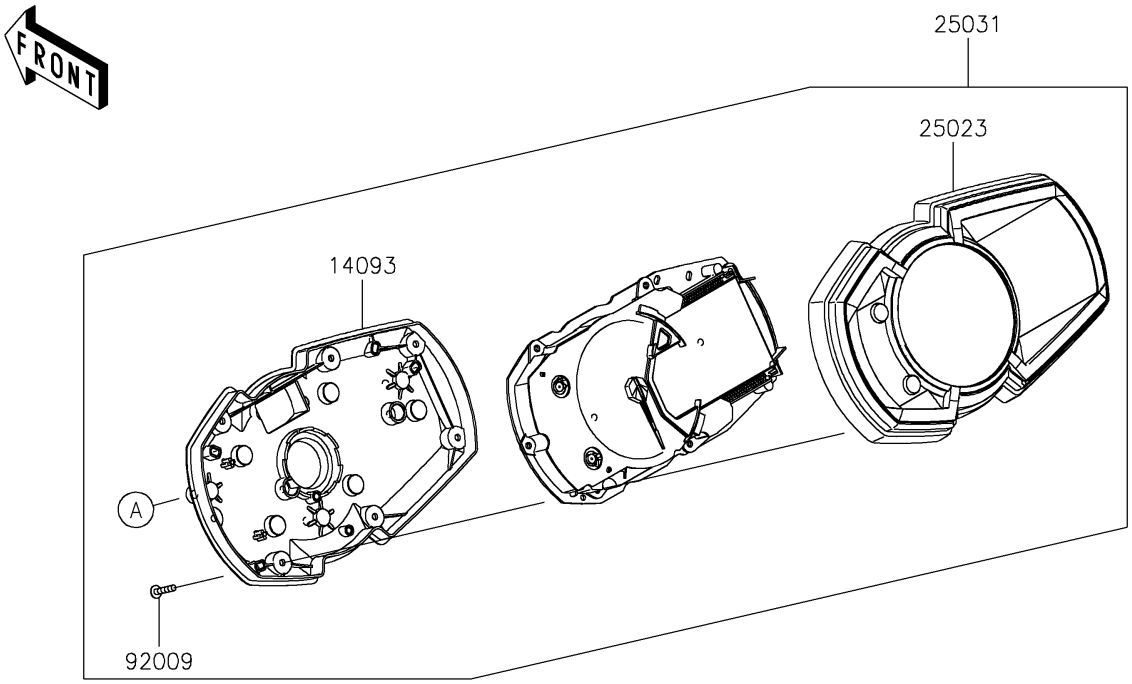

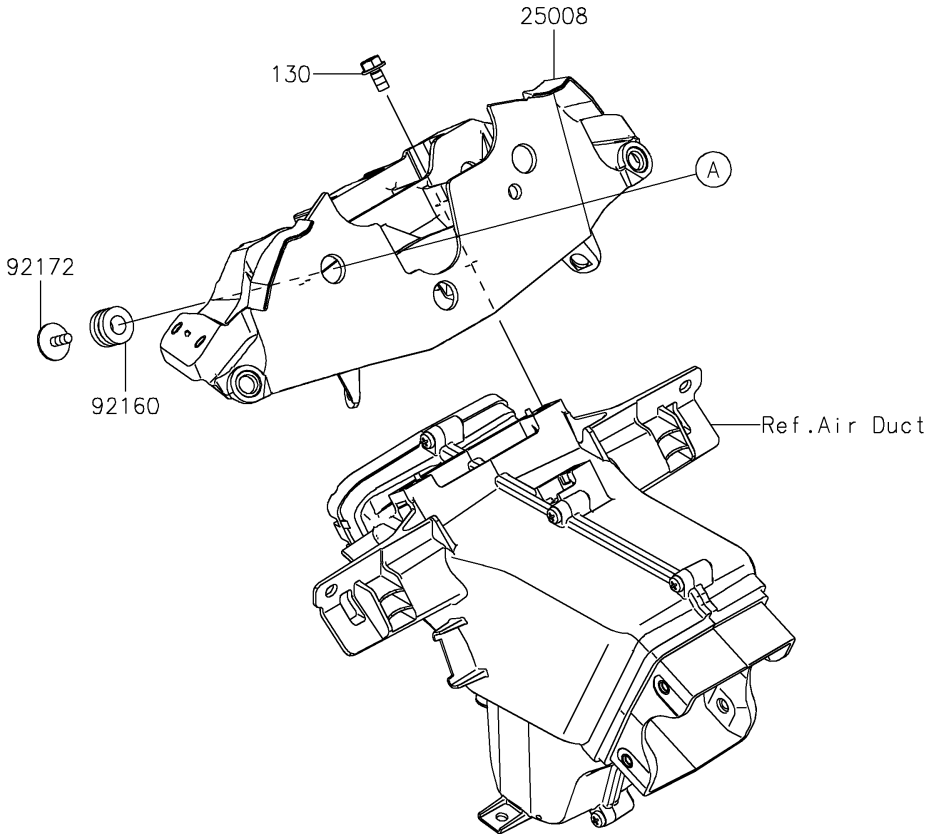

© 2025 Kawasaki Motors Corp., U.S.A.

2020 Ninja® ZX™-6R PARTS LIST

Meter(s)

ITEM NAME	PART NUMBER	QUANTITY
COVER,METER,LWR (Ref # 14093)	14093-0513	1
BRACKET-METER (Ref # 25008)	25008-0047	1
COVER-METER CASE (Ref # 25023)	25023-0141	1
METER-ASSY,COMBINATION (Ref # 25031)	25031-0788	1
SCREW,TAPPING,3X16 (Ref # 92009)	92009-1391	9
DAMPER,10X20X12 (Ref # 92160)	92160-1167	3
SCREW,TAPPING,WP,5X14 (Ref # 92172)	92172-0441	3
BOLT-FLANGED,6X12 (Ref # 130)	130BA0612	3

© 2025 Kawasaki Motors Corp., U.S.A.