2020 Ninja® ZX™-6R PARTS DIAGRAM

Engine Cover(s)

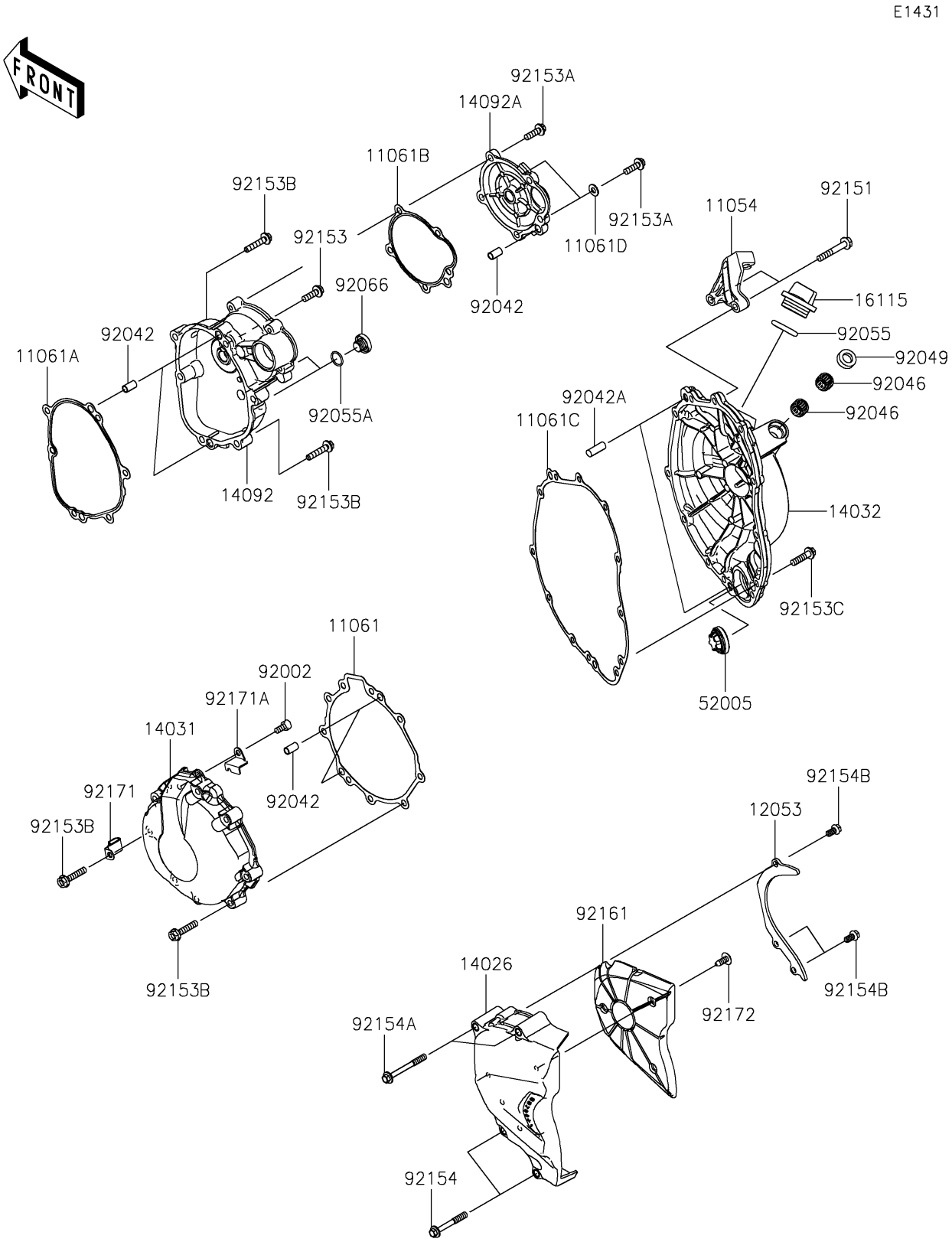

© 2025 Kawasaki Motors Corp., U.S.A.

2020 Ninja® ZX™-6R PARTS LIST

Engine Cover(s)

ITEM NAME	PART NUMBER	QUANTITY

© 2025 Kawasaki Motors Corp., U.S.A.