2020 Ninja® ZX™-6R PARTS DIAGRAM

Cylinder Head Cover

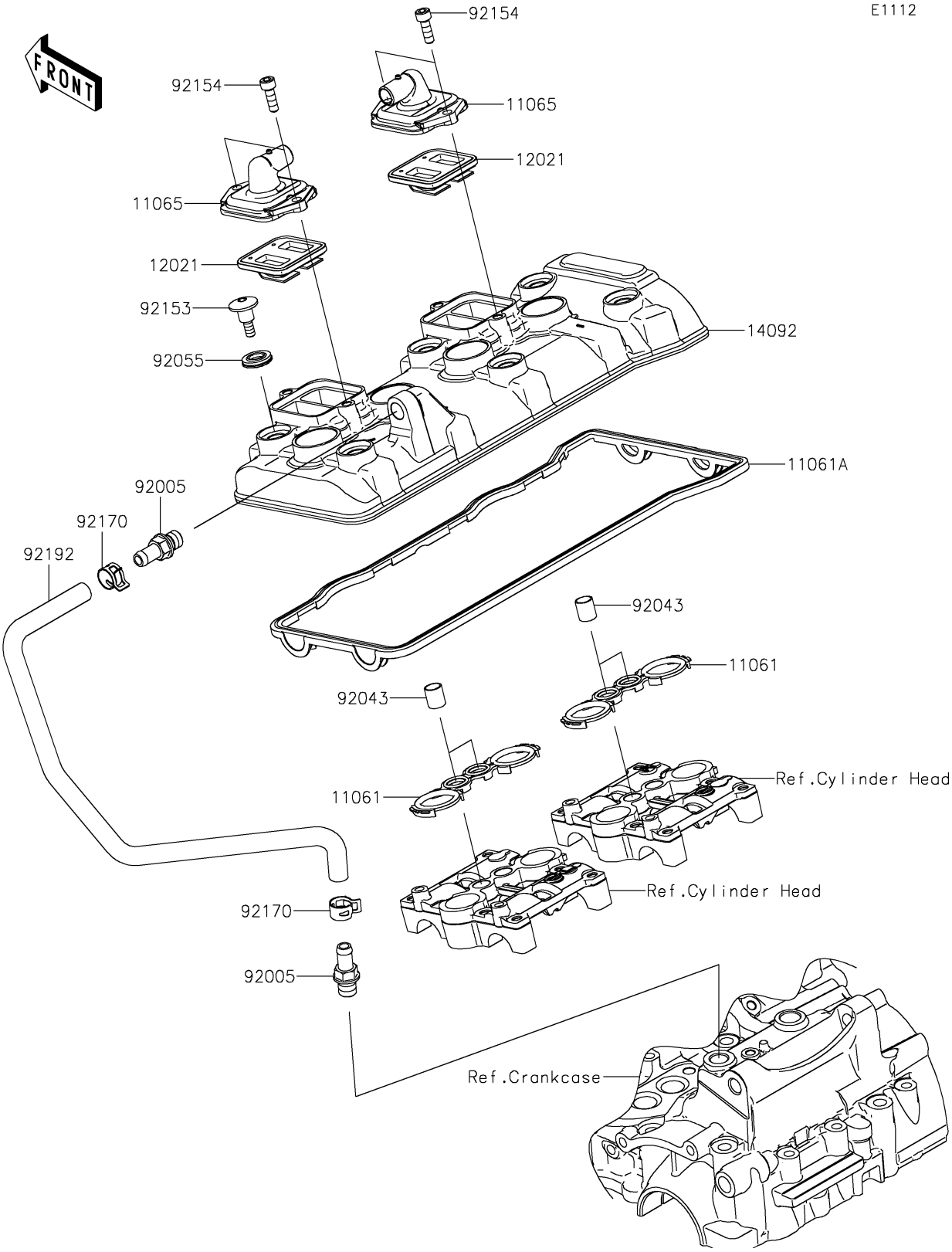

© 2025 Kawasaki Motors Corp., U.S.A.

2020 Ninja® ZX™-6R PARTS LIST

Cylinder Head Cover

ITEM NAME	PART NUMBER	QUANTITY
GASKET,PLUG HOLE (Ref # 11061)	11061-0374	2
GASKET,HEAD COVER (Ref # 11061A)	11061-0375	1
CAP,HEAD COVER (Ref # 11065)	11065-0328	2
VALVE-ASSY-REED (Ref # 12021)	12021-0016	2
COVER,HEAD (Ref # 14092)	14092-1084	1
FITTING,BREATHER CONNECTION (Ref # 92005)	92005-0086	2
PIN,10.1X12X14 (Ref # 92043)	92043-4009	4
RING-O (Ref # 92055)	92055-0187	6
BOLT,SOCKET,6X22.5 (Ref # 92153)	92153-1779	6
BOLT,SOCKET,6X18 (Ref # 92154)	92154-1832	4
CLAMP (Ref # 92170)	92170-1938	2
TUBE,BREATHER CONNECTION (Ref # 92192)	92192-0423	1

© 2025 Kawasaki Motors Corp., U.S.A.