2003 Vulcan 1500 Mean Streak PARTS DIAGRAM

Meter(s)

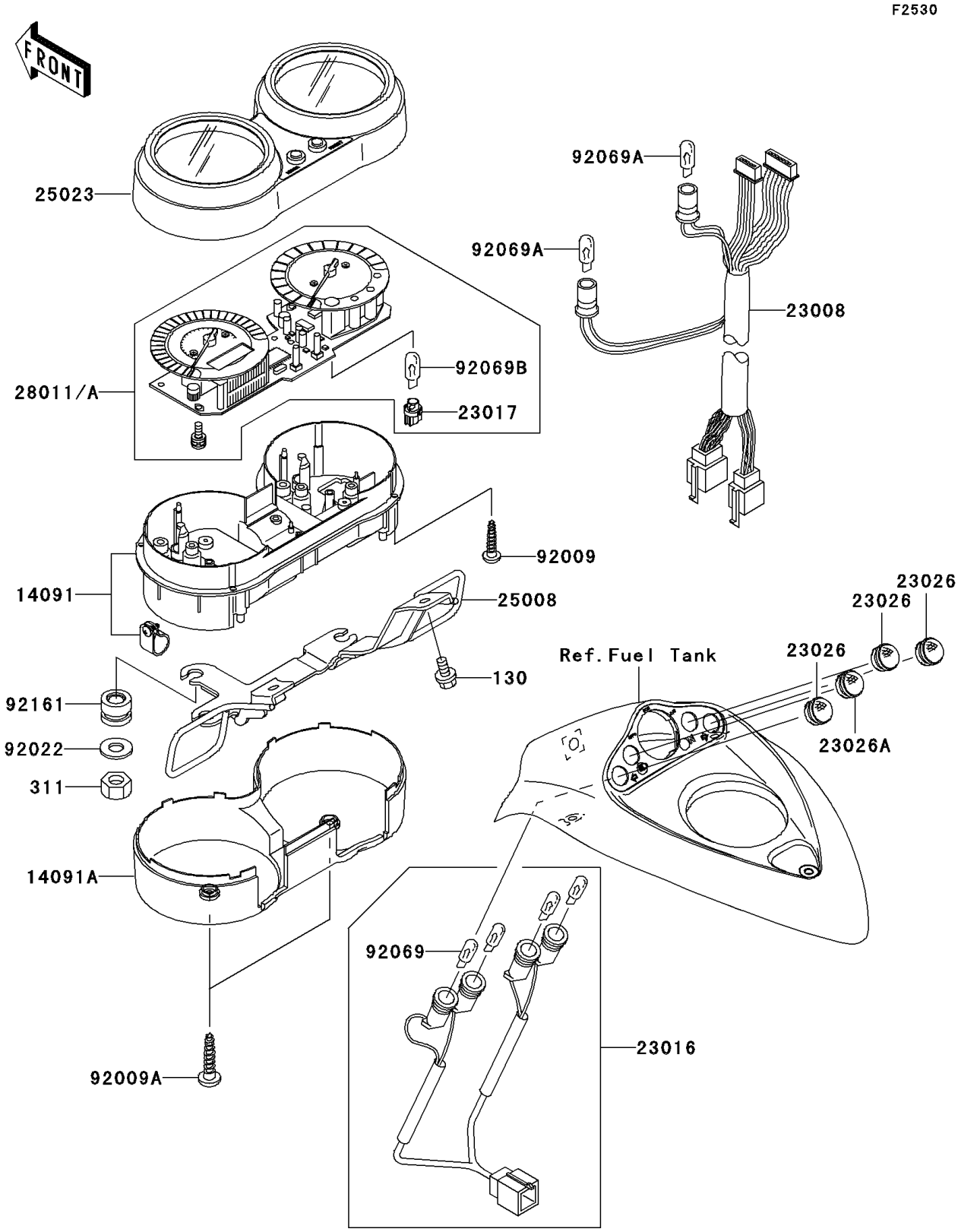

© 2024 Kawasaki Motors Corp., U.S.A.

2003 Vulcan 1500 Mean Streak PARTS LIST

Meter(s)

ITEM NAME	PART NUMBER	QUANTITY

© 2024 Kawasaki Motors Corp., U.S.A.