2004 Vulcan 1500 Nomad Fi PARTS DIAGRAM

Cylinder/Piston(s)

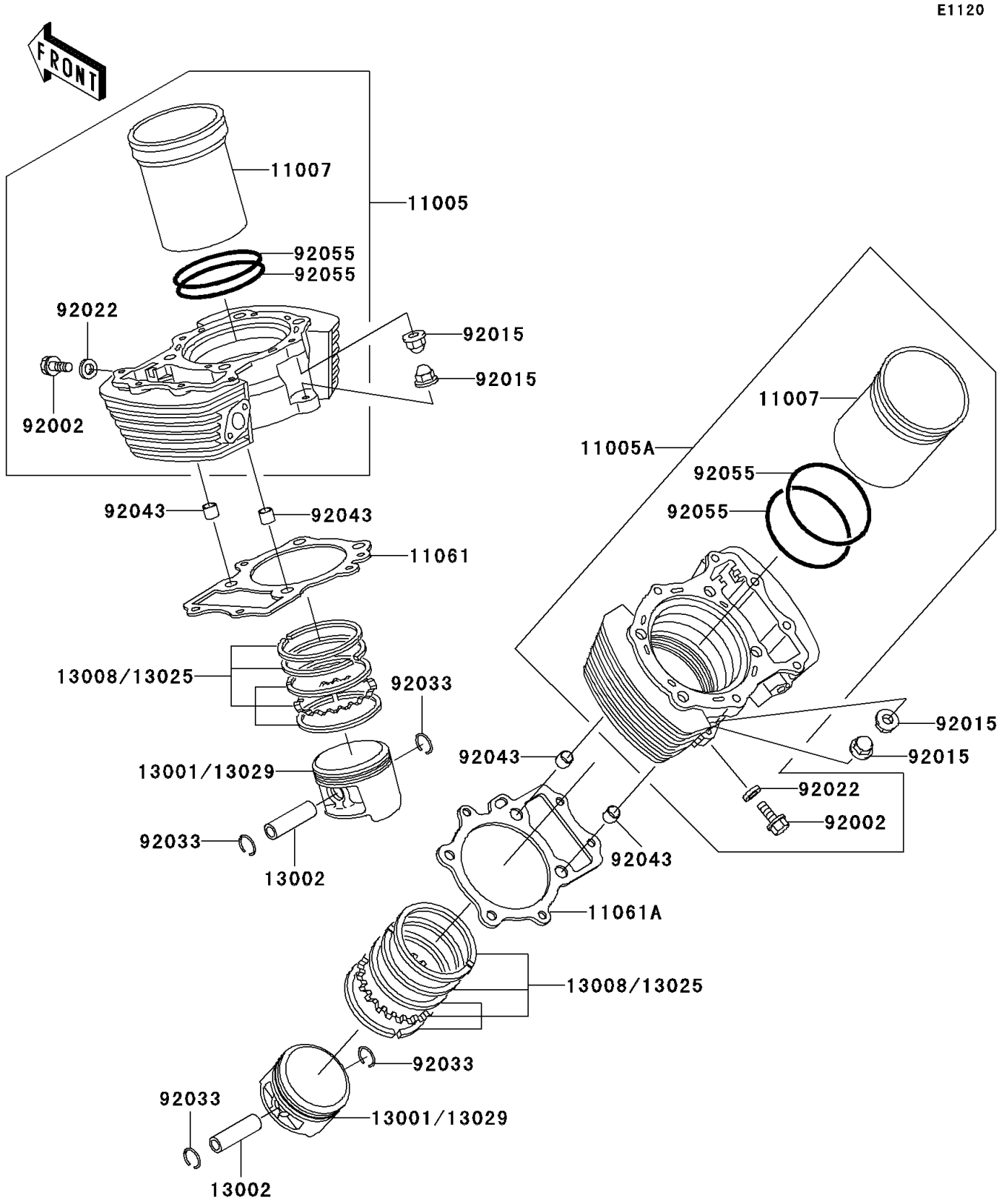

© 2024 Kawasaki Motors Corp., U.S.A.

2004 Vulcan 1500 Nomad Fi PARTS LIST

Cylinder/Piston(s)

ITEM NAME	PART NUMBER	QUANTITY
CYLINDER-ENGINE,FR (Ref # 11005)	11005-0006	1
CYLINDER-ENGINE,RR (Ref # 11005A)	11005-0008	1
LINER-CYLINDER (Ref # 11007)	11007-1176	2
GASKET,CYLINDER BASE,FR (Ref # 11061)	11061-1083	1
GASKET,CYLINDER BASE,RR (Ref # 11061A)	11061-1084	1
PISTON-ENGINE,STD (Ref # 13001)	13001-1617	2
PIN-PISTON (Ref # 13002)	13002-1107	2
RING-SET-PISTON,STD (Ref # 13008)	13008-1172	2
RING-SET-PISTON L,O/S 0.50 (Ref # 13025)	13025-1081	AR
PISTON-ENGINE L,O/S 0.50 (Ref # 13029)	13029-1286	AR
BOLT,6X12 (Ref # 92002)	92002-1569	2
NUT,CAP,8MM (Ref # 92015)	92015-1370	8
WASHER,6.1X12X1 (Ref # 92022)	92022-077	2
RING-SNAP (Ref # 92033)	92033-1226	4
PIN,13X16X14 (Ref # 92043)	92043-1608	4
RING-O,110.5X2.5 (Ref # 92055)	92055-1371	4

© 2024 Kawasaki Motors Corp., U.S.A.