# 2001 Vulcan 1500 Nomad Fi PARTS DIAGRAM

## Swingarm

F2141

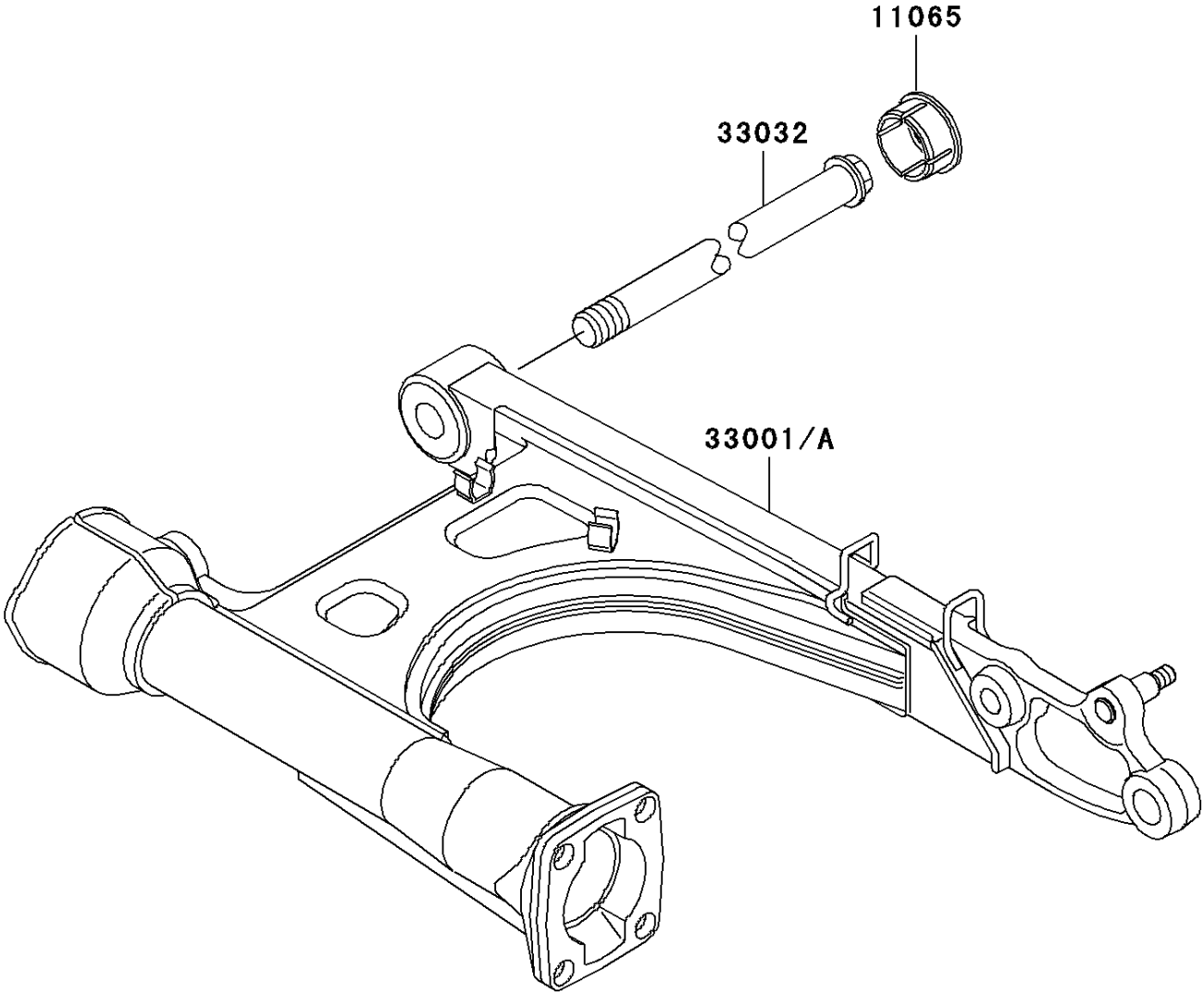


© 2024 Kawasaki Motors Corp., U.S.A.

# 2001 Vulcan 1500 Nomad Fi PARTS LIST

## Swingarm

| ITEM NAME | PART NUMBER | QUANTITY |
|---|---|---|
| CAP,SWING ARM (Ref # 11065) | 11065-1099 | 1 |
| ARM-COMP-SWING (Ref # 33001) | 33001-1600 | 1 |
| SHAFT-SWING ARM (Ref # 33032) | 33032-1181 | 1 |

© 2024 Kawasaki Motors Corp., U.S.A.