2022 MULE PRO-FXT™ RANCH EDITION PLATINUM PARTS DIAGRAM

Decals

F2861

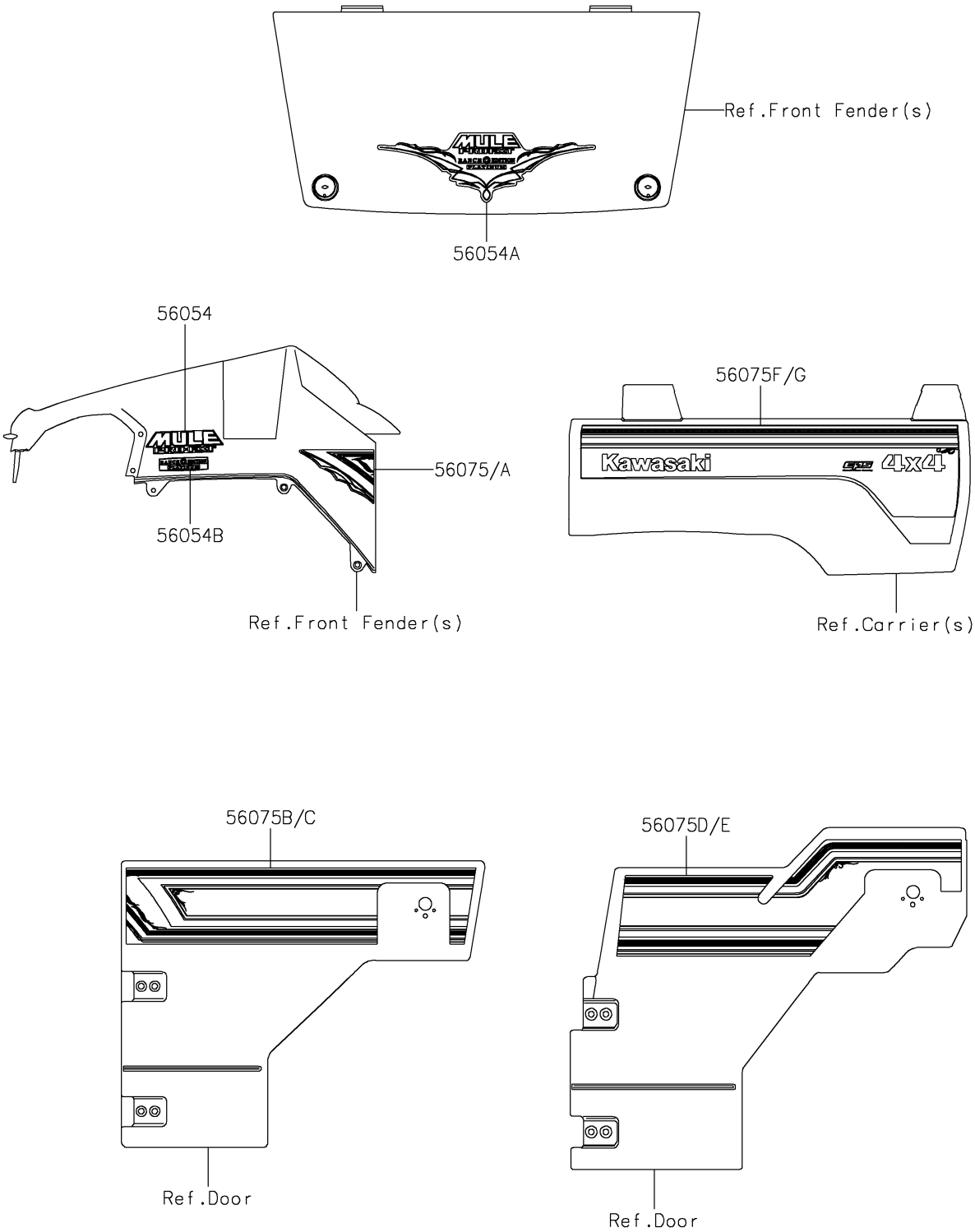

© 2025 Kawasaki Motors Corp., U.S.A.

2022 MULE PRO-FXT™ RANCH EDITION PLATINUM PARTS LIST

Decals

ITEM NAME	PART NUMBER	QUANTITY
MARK,FR FENDER,MULE PRO-FXT (Ref # 56054)	56054-1830	2
MARK,RANCH EDITION (Ref # 56054A)	56054-2912	1
MARK,RANCH EDITION (Ref # 56054B)	56054-2913	2
PATTERN,FR FENDER,LH (Ref # 56075)	56075-4449	1
PATTERN,FR FENDER,RH (Ref # 56075A)	56075-4450	1
PATTERN,SIDE GUARD,LH,FR (Ref # 56075B)	56075-4451	1
PATTERN,SIDE GUARD,RH,FR (Ref # 56075C)	56075-4452	1
PATTERN,SIDE GUARD,LH,RR (Ref # 56075D)	56075-4453	1
PATTERN,SIDE GUARD,RH,RR (Ref # 56075E)	56075-4454	1
PATTERN,CARRIER PANEL,LH (Ref # 56075F)	56075-4455	1
PATTERN,CARRIER PANEL,RH (Ref # 56075G)	56075-4456	1

© 2025 Kawasaki Motors Corp., U.S.A.