2022 MULE PRO-FXT™ RANCH EDITION PLATINUM PARTS DIAGRAM

Front Hubs/Brakes

F2230

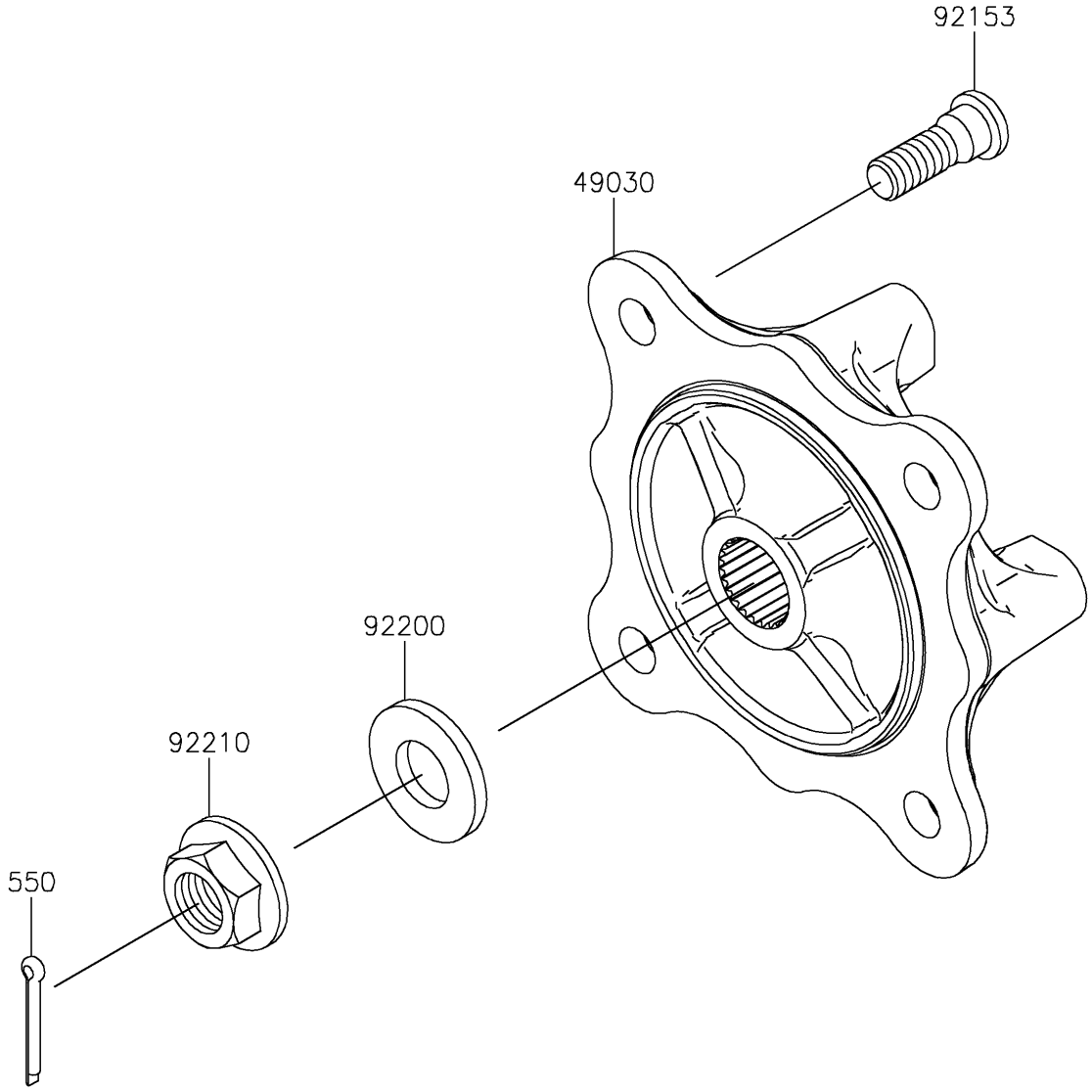

© 2025 Kawasaki Motors Corp., U.S.A.

2022 MULE PRO-FXT™ RANCH EDITION PLATINUM PARTS LIST

Front Hubs/Brakes

ITEM NAME	PART NUMBER	QUANTITY

© 2025 Kawasaki Motors Corp., U.S.A.