2022 MULE PRO-FXT™ RANCH EDITION PLATINUM PARTS DIAGRAM

Oil Pump/Oil Filter

E1710

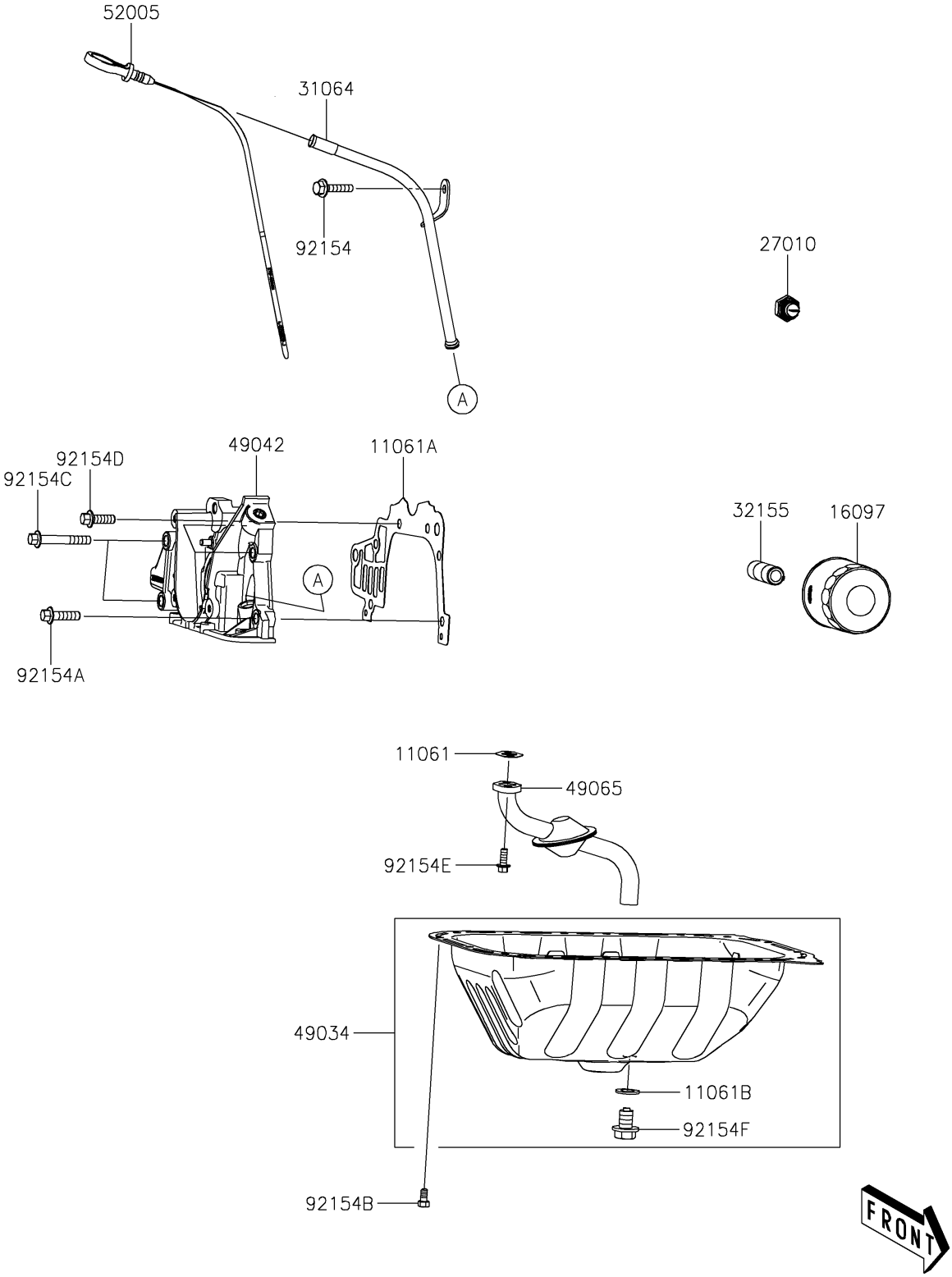

© 2024 Kawasaki Motors Corp., U.S.A.

2022 MULE PRO-FXT™ RANCH EDITION PLATINUM PARTS LIST

Oil Pump/Oil Filter

ITEM NAME	PART NUMBER	QUANTITY

© 2024 Kawasaki Motors Corp., U.S.A.