2000 Vulcan 1500 Nomad PARTS DIAGRAM

Gear Change Mechanism

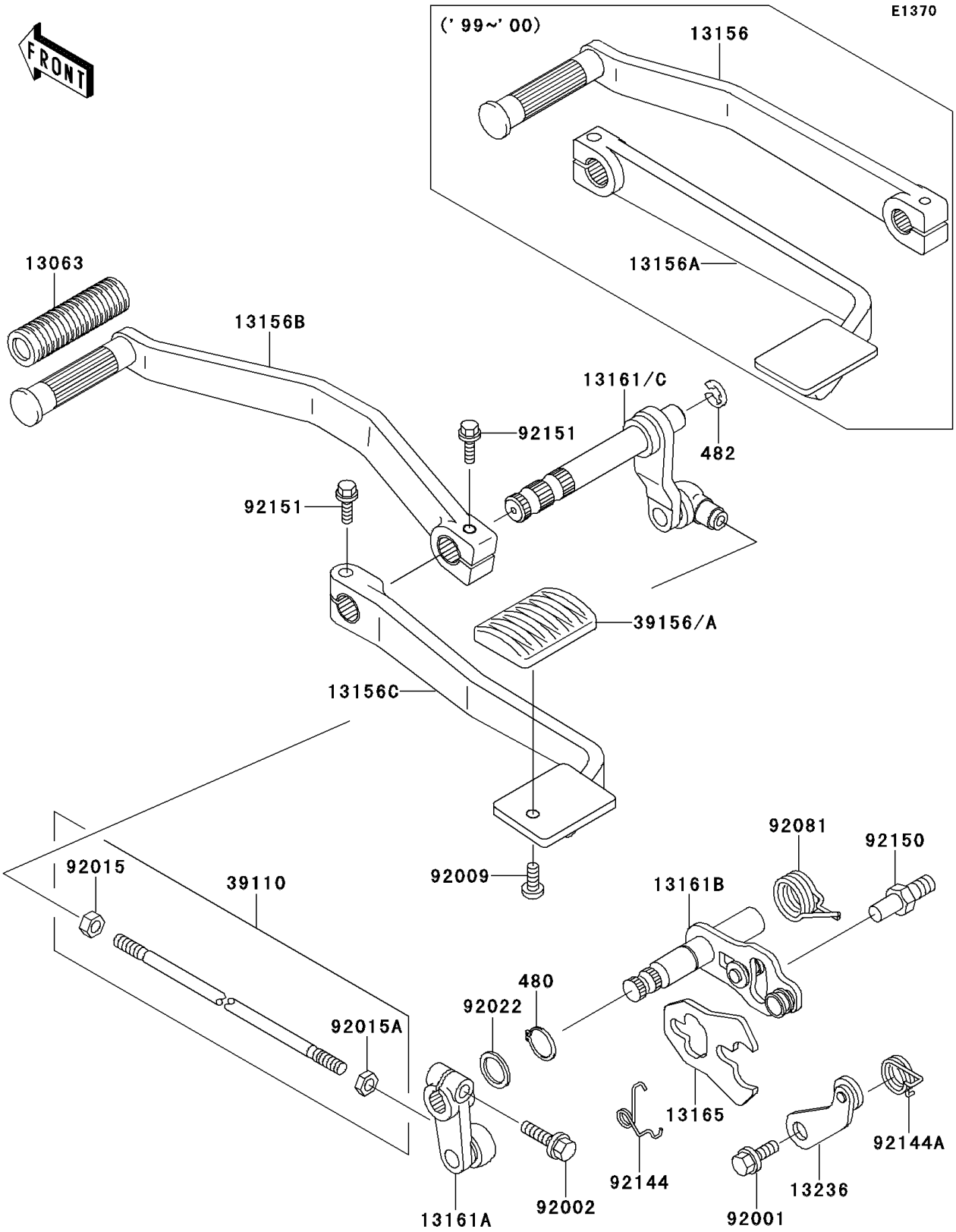

© 2026 Kawasaki Motors Corp., U.S.A.

2000 Vulcan 1500 Nomad PARTS LIST

Gear Change Mechanism

ITEM NAME	PART NUMBER	QUANTITY
CIRCLIP-TYPE-C,13MM (Ref # 480)	480J1300	1
CIRCLIP-TYPE-E,10MM (Ref # 482)	482L0100	1
DAMPER,PEDAL (Ref # 13063)	13063-002	1
LEVER-CHANGE,PEDAL (Ref # 13156)	13156-1422	1
LEVER-CHANGE,PEDAL (Ref # 13156A)	13156-1423	1
LEVER-COMP-CHANGE SHAFT (Ref # 13161)	13161-1248	1
LEVER-COMP-CHANGE SHAFT (Ref # 13161A)	13161-1253	1
LEVER-COMP-CHANGE SHAFT (Ref # 13161B)	13161-1254	1
PAWL (Ref # 13165)	13165-1120	1
LEVER-COMP,POSITION (Ref # 13236)	13236-1126	1
ROD-ASSY-TIE (Ref # 39110)	39110-1119	1
PAD,BRAKE PEDAL (Ref # 39156)	39156-1071	1
BOLT,GEAR CHANGE LEVER (Ref # 92001)	92001-1715	1
BOLT,6X20 (Ref # 92002)	92002-1237	1
NUT,LH,THREAD (Ref # 92015)	92015-1443	1
NUT,RH,THREAD (Ref # 92015A)	92015-1444	1
WASHER,13.2X20X0.5 (Ref # 92022)	92022-1224	1
SPRING,CHANGE PEDAL RETURN (Ref # 92081)	92081-1869	1
SPRING (Ref # 92144)	92144-1029	1
SPRING,RETURN (Ref # 92144A)	92144-1140	1
BOLT,RETURN SPRING (Ref # 92150)	92150-1869	1
BOLT,6X25 (Ref # 92151)	92151-1898	2

© 2026 Kawasaki Motors Corp., U.S.A.