2019 KLX®250 CAMO PARTS DIAGRAM

Side Covers/Chain Cover

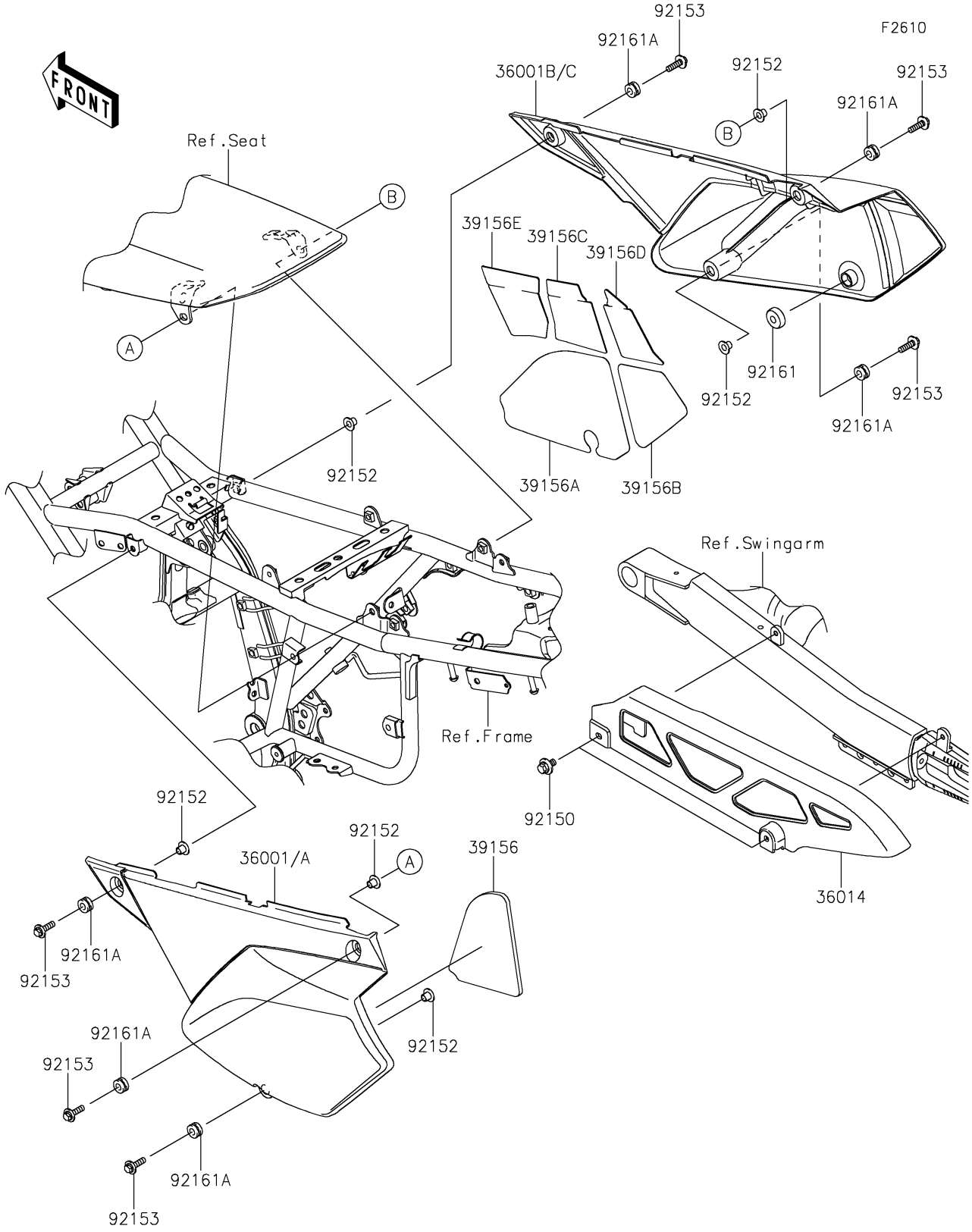

© 2024 Kawasaki Motors Corp., U.S.A.

2019 KLX®250 CAMO PARTS LIST

Side Covers/Chain Cover

ITEM NAME	PART NUMBER	QUANTITY
COVER-SIDE,LH,T.M.C.GRAY (Ref # 36001A)	36001-0173-36K	1
COVER-SIDE,RH,T.M.C.GRAY (Ref # 36001C)	36001-0175-36K	1
CASE-CHAIN (Ref # 36014)	36014-0050	1
PAD,SIDE COVER,LH (Ref # 39156)	39156-0197	1
PAD,SIDE COVER,RH (Ref # 39156A)	39156-0198	1
PAD,SIDE COVER,RH (Ref # 39156B)	39156-0199	1
PAD,124X91 (Ref # 39156C)	39156-2280	1
PAD,125X75 (Ref # 39156D)	39156-2281	1
PAD,125X100 (Ref # 39156E)	39156-2282	1
BOLT,6X12 (Ref # 92150)	92150-1435	2
COLLAR,6.3X8.3X9.2 (Ref # 92152)	92152-0237	6
BOLT,FLANGED,6X22 (Ref # 92153)	92153-0950	6
DAMPER (Ref # 92161)	92161-0605	1
DAMPER,8X16X8.6 (Ref # 92161A)	92161-0685	6

© 2024 Kawasaki Motors Corp., U.S.A.