# 2018 KLX®250 PARTS DIAGRAM

## Side Covers/Chain Cover

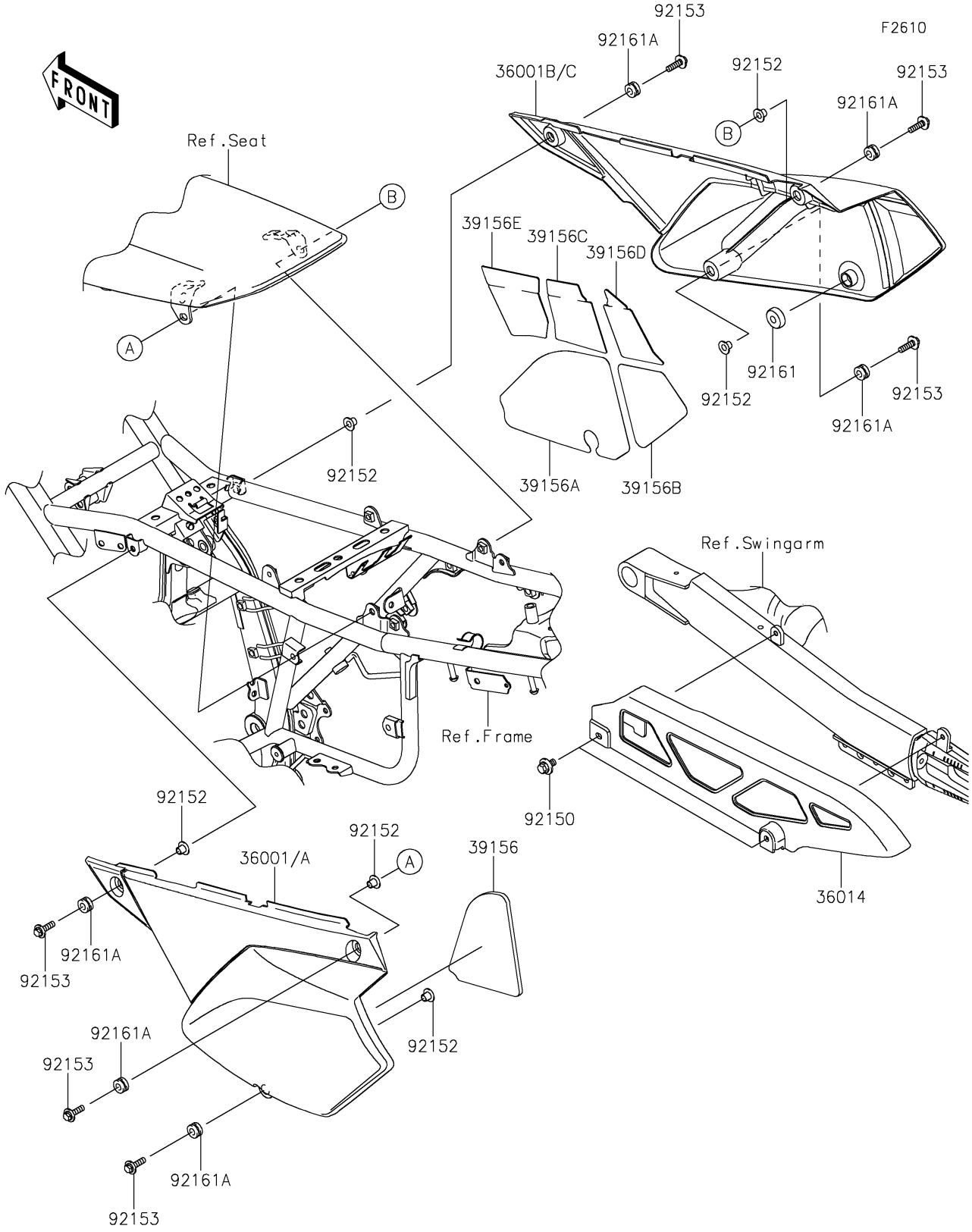


© 2024 Kawasaki Motors Corp., U.S.A.

# 2018 KLX®250 PARTS LIST

## Side Covers/Chain Cover

| ITEM NAME | PART NUMBER | QUANTITY |
|---|---|---|
| COVER-SIDE,LH,B.WHITE (Ref # 36001) | 36001-0173-266 | 1 |
| COVER-SIDE,RH,B.WHITE (Ref # 36001B) | 36001-0175-266 | 1 |
| CASE-CHAIN (Ref # 36014) | 36014-0050 | 1 |
| PAD,SIDE COVER,LH (Ref # 39156) | 39156-0197 | 1 |
| PAD,SIDE COVER,RH (Ref # 39156A) | 39156-0198 | 1 |
| PAD,SIDE COVER,RH (Ref # 39156B) | 39156-0199 | 1 |
| PAD,124X91 (Ref # 39156C) | 39156-2280 | 1 |
| PAD,125X75 (Ref # 39156D) | 39156-2281 | 1 |
| PAD,125X100 (Ref # 39156E) | 39156-2282 | 1 |
| BOLT,6X12 (Ref # 92150) | 92150-1435 | 2 |
| COLLAR,6.3X8.3X9.2 (Ref # 92152) | 92152-0237 | 6 |
| BOLT,FLANGED,6X22 (Ref # 92153) | 92153-0950 | 6 |
| DAMPER (Ref # 92161) | 92161-0605 | 1 |
| DAMPER,8X16X8.6 (Ref # 92161A) | 92161-0685 | 6 |

© 2024 Kawasaki Motors Corp., U.S.A.