2019 KLX®250 CAMO PARTS DIAGRAM

Stand(s)

F2190

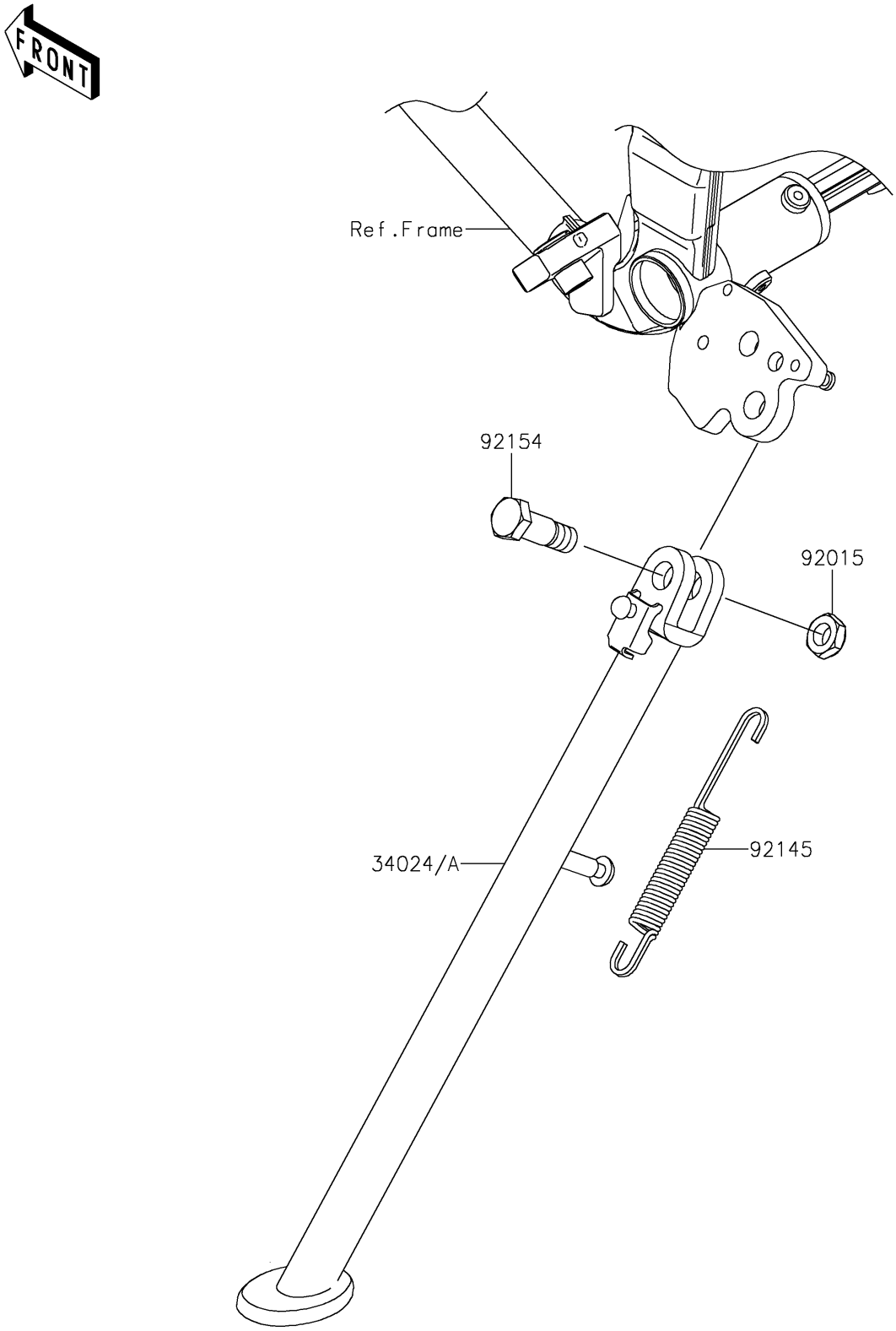

© 2024 Kawasaki Motors Corp., U.S.A.

2019 KLX®250 CAMO PARTS LIST

Stand(s)

ITEM NAME	PART NUMBER	QUANTITY
STAND-SIDE,F.S.BLACK (Ref # 34024)	34024-0079-18R	1
NUT,LOCK,10MM,BLACK (Ref # 92015)	92015-1188	1
SPRING,SIDE STAND (Ref # 92145)	92145-0085	1
BOLT,SIDE STAND (Ref # 92154)	92154-0412	1

© 2024 Kawasaki Motors Corp., U.S.A.